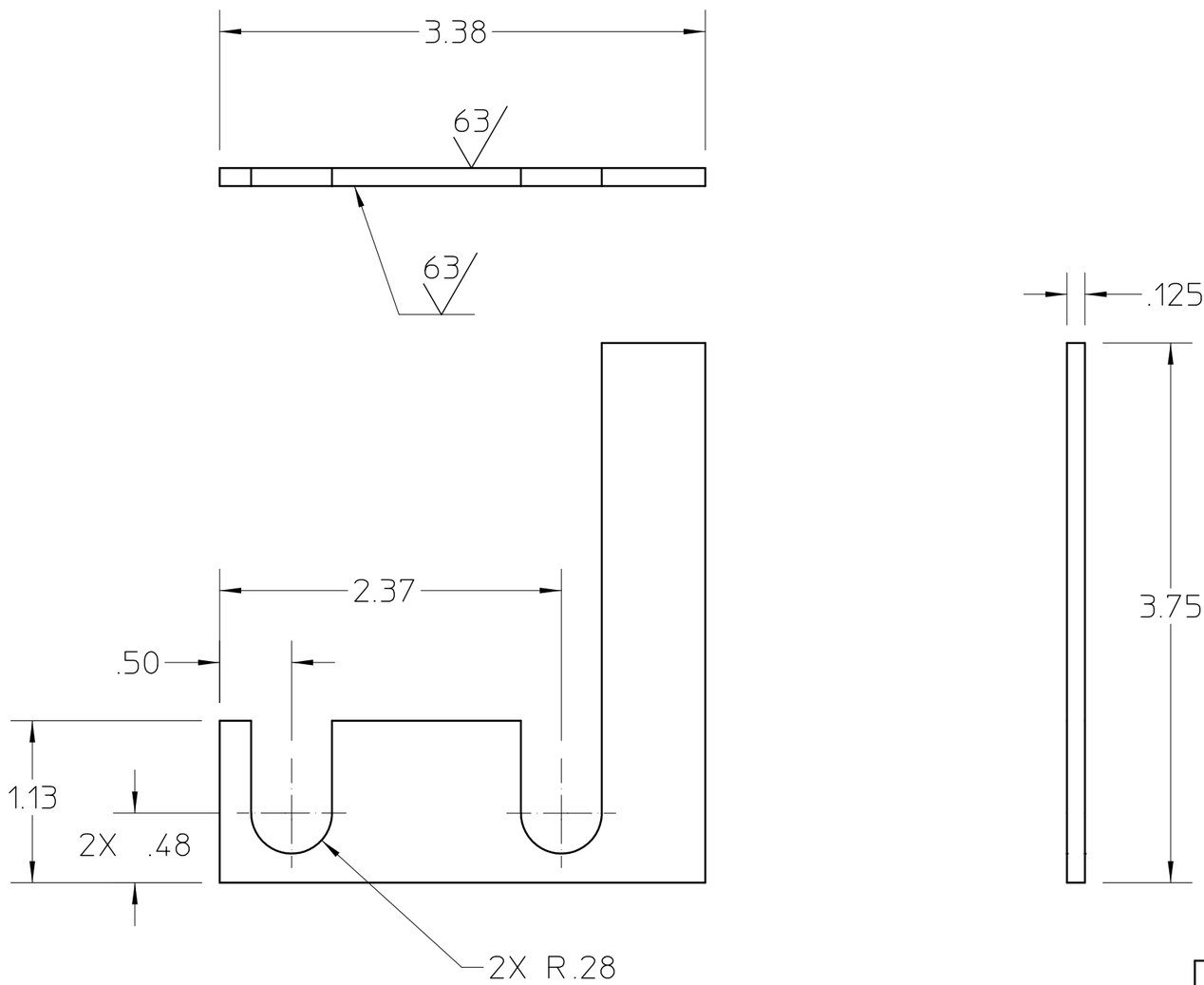

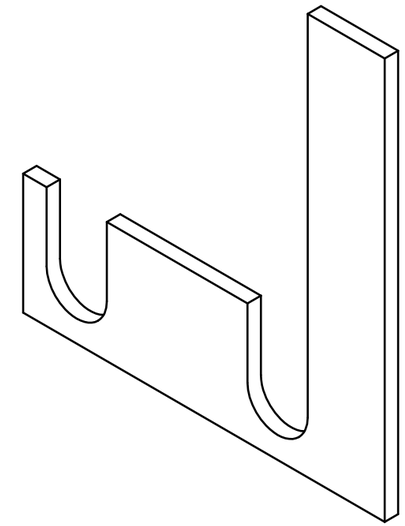

MAT 2: ,	NOTES:
MAT 1: PLATE, MILD CARBON STEEL	NOTES:

REV	ZONE	CHANGES	DWG BY	DATE

UNLESS OTHERWISE SPECIFIED

TOLERANCE .X ± .XX ±.01 .XXX ±.005

SURFACE FINISH 125 ✓

1. SAWED, FLAMECUT, SHEARED OR CUT STOCK FINISH.
2. THREADS CLASS 2.
3. CHAMFER ENDS OF ALL SCREW THRDS 30°.
4. 1 1/2 PITCH RELIEF WITH ROUND NOSE TOOL ON ALL MACHINE CUT THRDS.
5. BREAK EDGES 1/64 MAX. ON MACHINE WORK.
6. REMOVE BURRS, LOOSE SCALE AND WELD SPLATTER.
7. REF.-USASI OR ASA STDS SECT Y-14 & B46-1.

SHOP ORDERS

ACCT NO		SER NO	
DATE ISSD	DATE REQD	NO REQD	2
DELIVER TO		IDENT METH	SEE NOTES
SURFACE TREATMENT	DEGREASE		
DWG BY	ajdemell	DATE	11-12-2002
CHK BY	ajdemell	DATE	11-25-2002
APP BY	kelez	DATE	11-26-2002

LAWRENCE BERKELEY LABORATORY
UNIVERSITY OF CALIFORNIA-BERKELEY

LIGHT SOURCE - BEND MAGNET BEAMLINES

BL 12.3.1 END STATION

UPSTREAM BEARING MOUNT SHIM

PAT CLEAR	DWG TYPE	SHOWN ON	SCALE: 1 : 1
			DO NOT SCALE PRINTS
MICROFILMED	DESIGN ACCT NO	CATEGORY CODE	DWG NO 26A3892 Size A Rev
	-	AL6193	

SHEET 1 OF 1

AUTO GENERATED PDF – Nov 26 2002 09:46:14 PST