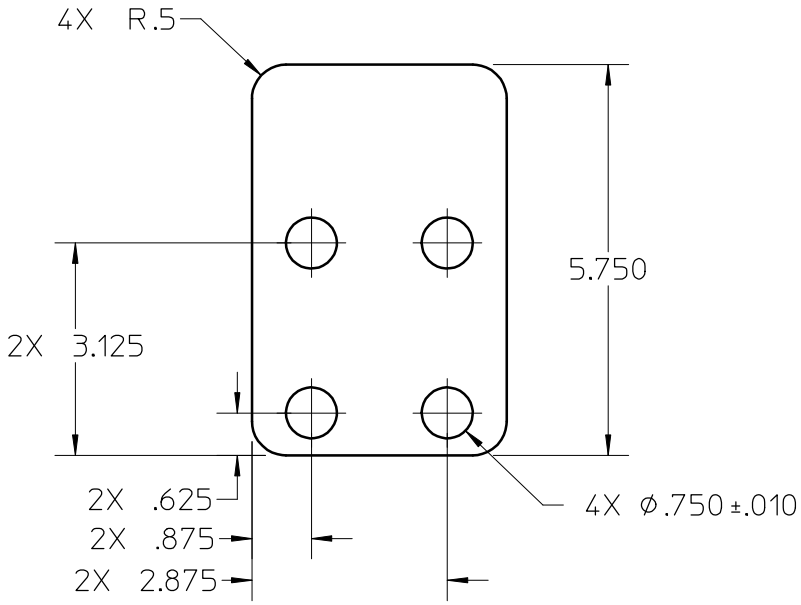

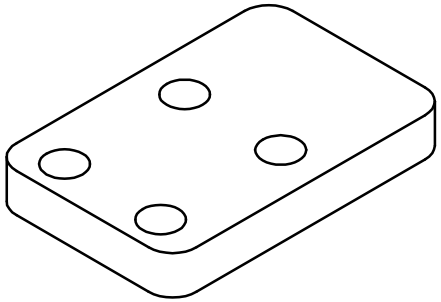

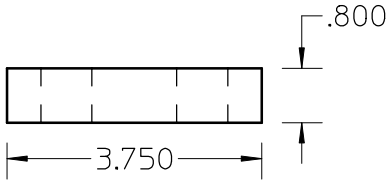

MAT 2: ,	NOTES:
MAT 1: , ALUMINUM 6061	NOTES:

REV	ZONE	CHANGES	DWG BY	DATE
B		Increase hole size & change material	ajdemell	2003/02/03

UNLESS OTHERWISE SPECIFIED

TOLERANCE .X ± .XX ±.01 .XXX ±.005

SURFACE FINISH 125 ✓

1. SAWED, FLAMECUT, SHEARED OR CUT STOCK FINISH.
2. THREADS CLASS 2.
3. CHAMFER ENDS OF ALL SCREW THRDS 30°.
4. 1 1/2 PITCH RELIEF WITH ROUND NOSE TOOL ON ALL MACHINE CUT THRDS.
5. BREAK EDGES 1/64 MAX. ON MACHINE WORK.
6. REMOVE BURRS, LOOSE SCALE AND WELD SPLATTER.
7. REF.-USASI OR ASA STDS SECT Y-14 & B46-1.

SHOP ORDERS

ACCT NO	SER NO	
DATE ISSD	DATE REQD	NO REQD 2
DELIVER TO	IDENT METH	SEE NOTES
SURFACE TREATMENT	BLACK ANODIZE	
DWG BY ajdemell		DATE 2002/11/12
CHK BY ajdemell		DATE 2002/11/25
APP BY kelez		DATE 2002/11/26

LAWRENCE BERKELEY LABORATORY

UNIVERSITY OF CALIFORNIA-BERKELEY

LIGHT SOURCE - BEND MAGNET BEAMLINES

BL 12.3.1 END STATION

RAFT MOUNT SHIM PLATE, DOWNSTREAM

PAT CLEAR	DWG TYPE	SHOWN ON	SCALE: 1:2
			DO NOT SCALE PRINTS
MICROFILMED	DESIGN ACCT NO -	CATEGORY CODE AL6193	DWG NO 26A3872 Size Rev B

SHEET 1 OF 1