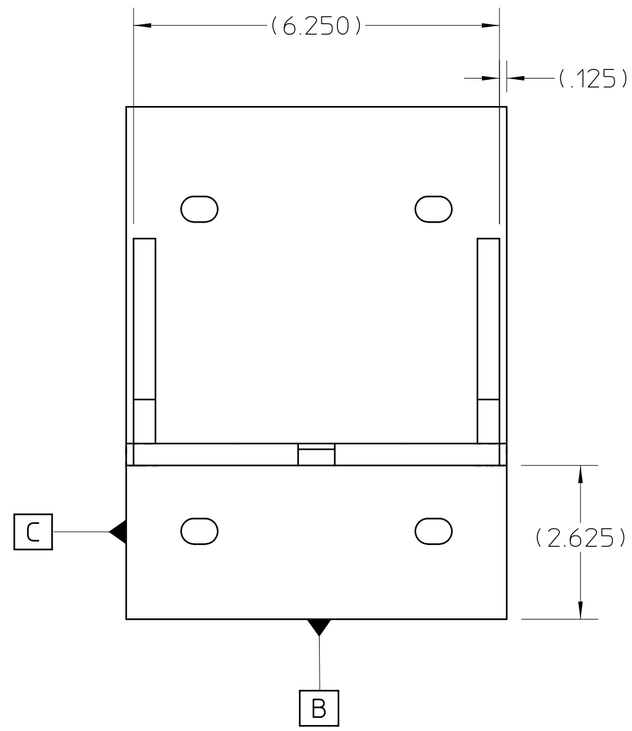

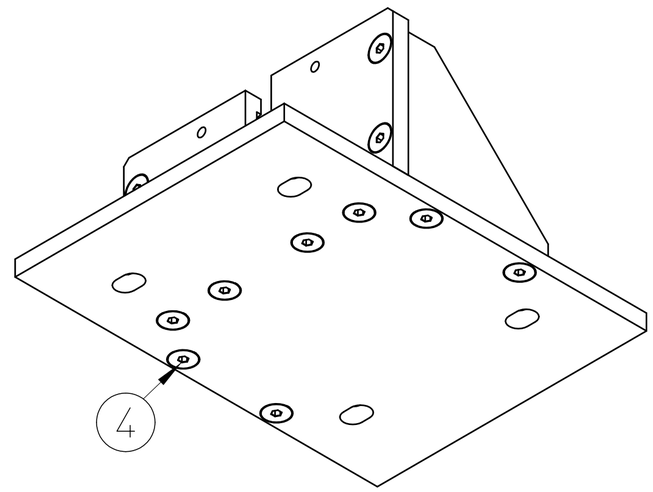

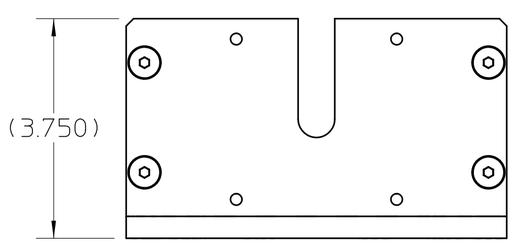

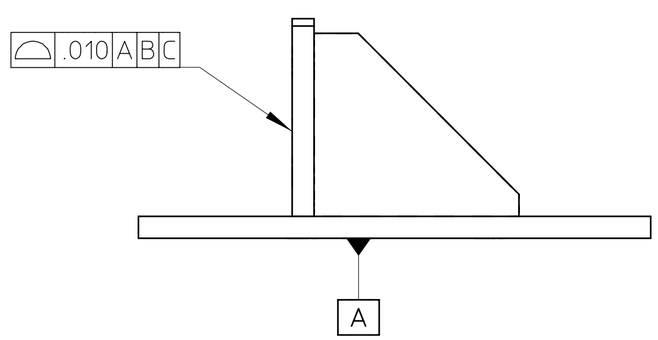

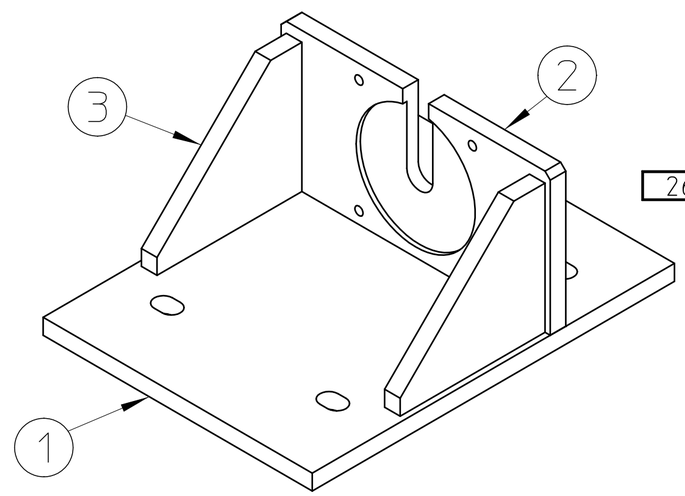

26A3753A

REQD	ITEM	PART NO.	DESCRIPTION
12	4	-	1/4-20 x 3/4" FLAT HEAD SHCS
2	3	26A378	COMPUMOTOR MOUNTING BRACKET, GUSSET
1	2	26A377	COMPUMOTOR MOUNTING BRACKET, HORZ. PLATE
1	1	26A376	COMPUMOTOR MOUNTING BRACKET, VERT. PLATE

REV	ZONE	CHANGES	DWG BY	DATE	CHK BY	DATE	APP BY	DATE

UNLESS OTHERWISE SPECIFIED

TOLERANCES: .X ± - FRAC. ± - ; .XX ± - ANGLES ±° ; .XXX ± - FINISH 125√

THREADS ARE CLASS 2
CHAMFER ENDS OF ALL SCREW THREADS 30°.
CUT 1.5 PITCH THRD RELIEF WITH ROUND NOSE TOOL ON MACHINE CUT THREADS.
BREAK EDGES .016 MAX. ON MACHINED WORK
REMOVE BURRS WELD SPLATTER & LOOSE SCALE
REFERENCES: ANSI Y14.5 & B46.1.

SHOP ORDERS

ACCT. NO.		SERIAL NO.	
DATE ISSD.	DATE REQD.	NO REQD.	
DELIVER TO		IDENT METH.	SEE NOTES
SURFACE TREATMENT			
DWG. BY	ajdemell	DATE	11-11-2002
CHK. BY	ajdemell	DATE	11-25-2002
APP. BY	kelez	DATE	11-26-2002

LAWRENCE BERKELEY LABORATORY
UNIVERSITY OF CALIFORNIA-BERKELEY

LIGHT SOURCE - BEND MAGNET BEAMLINES

BL 12.3.1 END STATION

COMPUMOTOR MOUNTING BRACKET ASSY

PATENT CLEAR	DWG. TYPE	SHOWN ON	SCALE 1 : 2	DO NOT SCALE PRINTS
MICROFILMED	DESIGN ACCT. NO. -	CATEGORY CODE AL6193	DWG. NO. 26A3753	SIZE / REV. A

SHEET 1 OF 1

AUTO GENERATED PDF – Nov 26 2002 09:42:42 PST