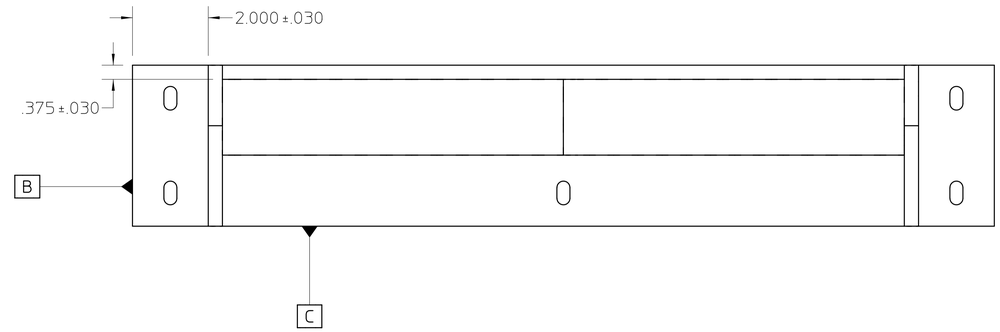

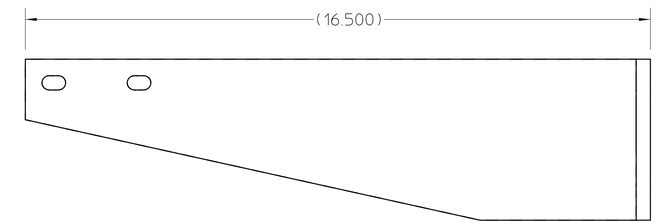

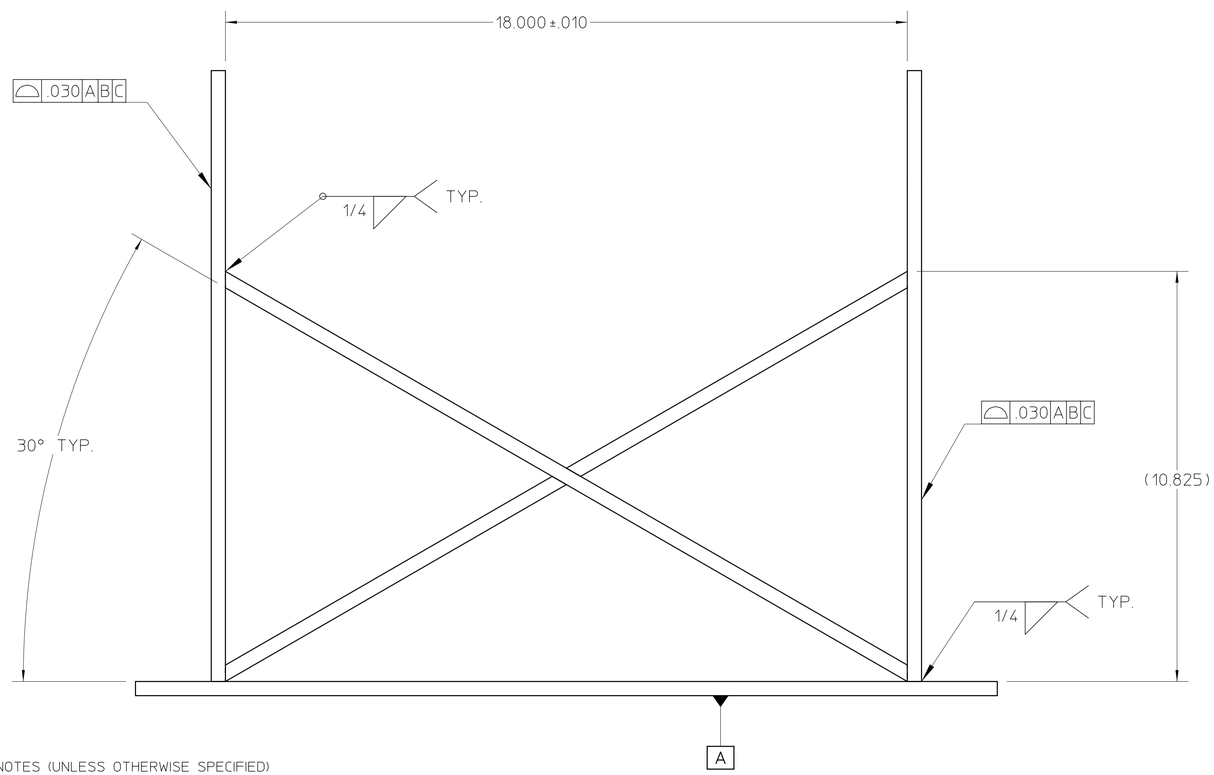

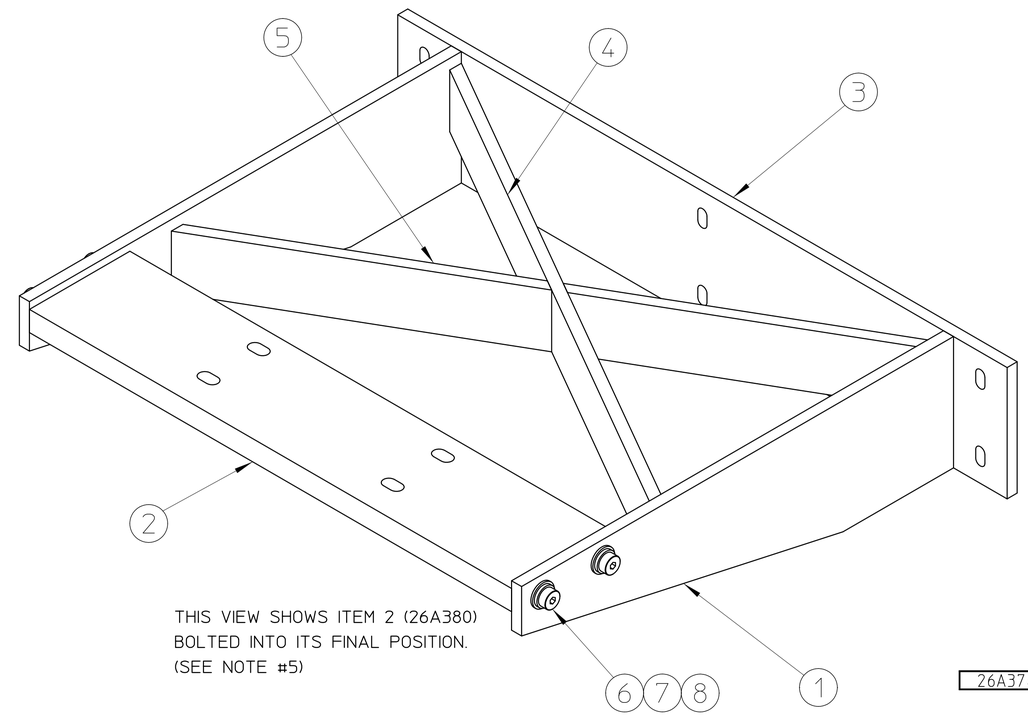

THIS VIEW SHOWS ITEM 2 (26A380)
BOLTED INTO ITS FINAL POSITION.
(SEE NOTE #5)

26A3744A

NOTES (UNLESS OTHERWISE SPECIFIED)

1. ALL WELD SYMBOLS PER ANSI/AWS/A2.4-1993.
2. WELDS PER ANSI/AWS/D1.1-1990.
3. ALL WELDS ARE 1/4" CONTINIOUS FILLET TYPE.
3. SAWED CUT PERMISSIBLE FOR ITEMS 1 AND 3 THRU 5.
4. SURFACE TREATMENT:
   A) ALL SURFACES TO BE FREE OF BURRS, CHIPS, SCALE, SLAG, RUST, DIRT, OIL AND GREASE.
5. USE OF ITEM 2 (26A380) TO ASSIST IN WELDING ASSEMBLY IS PERMISSIBLE.

REQD	ITEM	PART NO.	DESCRIPTION
-	9	-	
4	8	-	3/8" FLAT WASHER, MCMASTER #98019A399 OR EQUIV.
4	7	-	3/8" LOCK WASHER, MCMASTER #92146A031 OR EQUIV.
4	6	-	3/8" x 1/2" SHOULDER SHCS, MCMASTER #90298A619 OR EQUIV.
2	5	26A384	BEARING SUPPORT SUBFRAME, GUSSET, SHORT
1	4	26A383	BEARING SUPPORT SUBFRAME, GUSSET, LONG
1	3	26A382	BEARING SUPPORT SUBFRAME, VERT. PLATE
1	2	26A381	BEARING SUPPORT SUBFRAME, HORZ. PLATE
2	1	26A380	BEARING SUPPORT SUBFRAME, ARM

REV	ZONE	CHANGES	DWG BY	DATE	CHK BY	DATE	APP BY	DATE

UNLESS OTHERWISE SPECIFIED
TOLERANCES: .X ± - FRAC. ± - / .XX ± - ANGLES ± ° / .XXX ± - FINISH 125
THREADS ARE CLASS 2
CHAMFER ENDS OF ALL SCREW THREADS 30°.
CUT 1.5 PITCH THRD RELIEF WITH ROUND NOSE TOOL ON MACHINE CUT THREADS.
BREAK EDGES .016 MAX. ON MACHINED WORK
REMOVE BURRS WELD SPLATTER & LOOSE SCALE
REFERENCES: ANSI Y14.5 & B46.1.

SHOP ORDERS
ACCT. NO. / SERIAL NO.
DATE ISSD. / DATE REQD. / NO. REQD.
DELIVER TO / IDENT. METH. / SEE NOTES
SURFACE TREATMENT DEGREASE
DWG. BY gjdemell DATE 11-11-2002
CHK. BY gjdemell DATE 11-25-2002
APP. BY kelez DATE 11-26-2002

LAWRENCE BERKELEY LABORATORY
UNIVERSITY OF CALIFORNIA-BERKELEY
LIGHT SOURCE - BEND MAGNET BEAMLINES
BL 12.3.1 END STATION
BEARING SUPPORT SUBFRAME WELDMENT

PATENT CLEAR	DWG. TYPE	SHOWN ON	SCALE 1:2	DO NOT SCALE PRINTS
MICROFILMED	DESIGN ACCT. NO. -	CATEGORY CODE AL6193	DWG. NO. 26A3744	SIZE A / REV.

SHEET 1 OF 1

AUTO GENERATED PDF – Nov 26 2002 09:41:52 PST