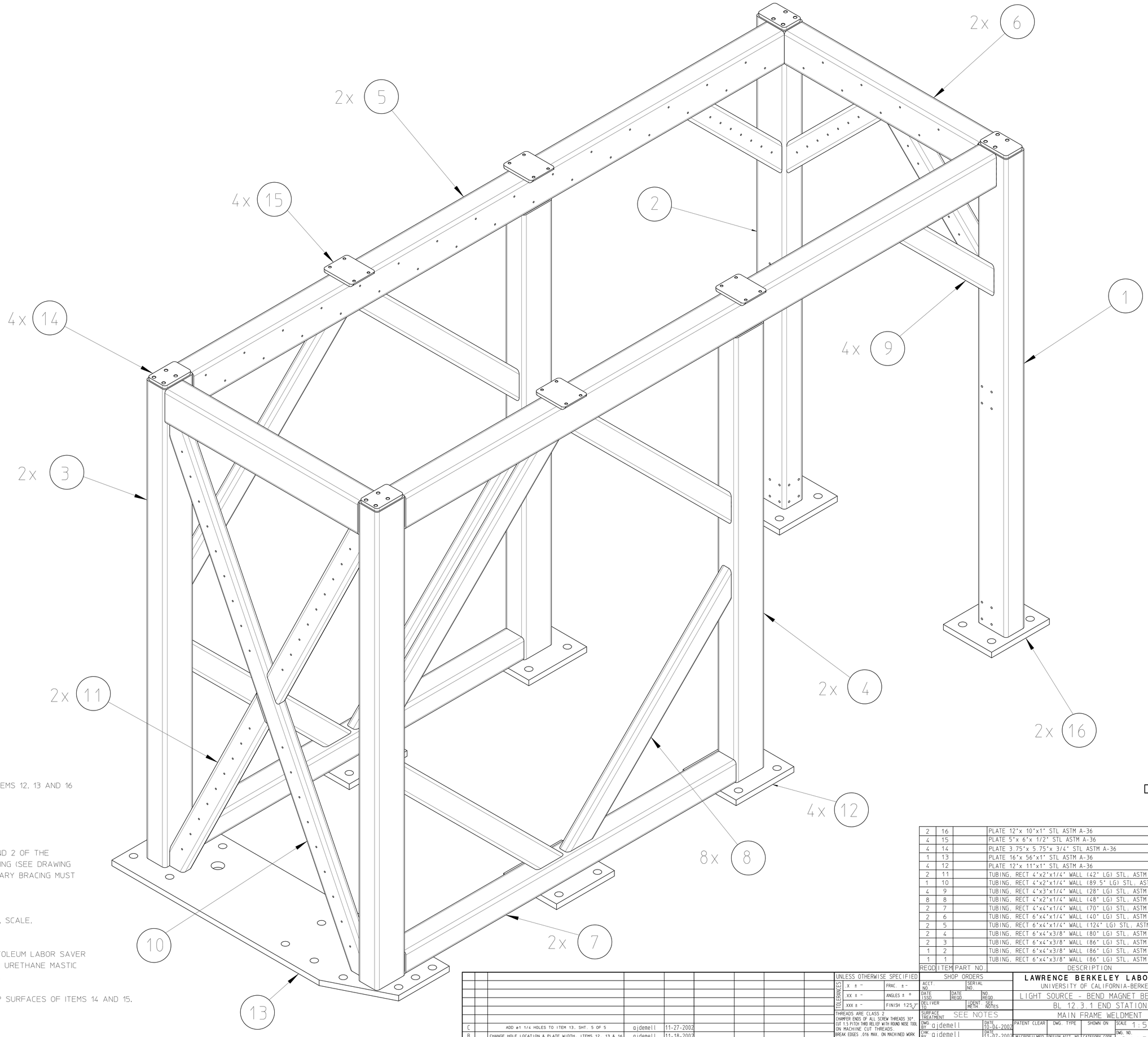

NOTES (UNLESS OTHERWISE SPECIFIED)

1. ALL DIMENSIONS ARE IN INCHES.
2. ALL WELD SYMBOLS PER ANSI/AWS/A2.4-1993.
3. WELDS PER ANSI/AWS/D1.1-1990.
4. SAW CUT PERMISSIBLE FOR ITEMS 1 THRU 11 EXCEPT FOR TAPPED AND MACHINED HOLES.
5. EDGES MAY BE FLAME CUT & HAND SANDED ON ITEMS 12, 13 AND 16 (EXCEPT FOR MACHINED HOLES).
6. USE OF 1/8" DIAMETER ROD AS A FILLER FOR ALL FLARE BEVEL WELDS IS PERMISSIBLE.
7. USE TEMPORARY BRACING TO SUPPORT ITEMS 1 AND 2 OF THE WELDMENT DURING WELDING, MACHINING AND SHIPPING (SEE DRAWING NUMBERS 26A366, 26A368, 26A369). THE TEMPORARY BRACING MUST BE REMOVED PRIOR TO PAINTING.
8. SURFACE TREATMENT:
   A) ALL SURFACES TO BE FREE OF BURRS, CHIPS, SCALE, SLAG, RUST, DIRT, OIL AND GREASE.
   B) ALL SURFACES SHALL BE PAINTED WITH RUSTOLEUM LABOR SAVER HIGH PERFORMANCE POLYURETHANE 9800 DTM URETHANE MASTIC SYSTEM #9879 GLOSS BLACK OR EQUIVALENT.
9. DO NOT PAINT THE TAPPED HOLES IN OR THE TOP SURFACES OF ITEMS 14 AND 15.
10. APPROXIMATE WEIGHT: 2412 lbs.

26A3206C

REQD	ITEM	PART NO.	DESCRIPTION
2	16		PLATE 12"x 10"x1" STL ASTM A-36
4	15		PLATE 5"x 6"x 1/2" STL ASTM A-36
4	14		PLATE 3.75"x 5.75"x 3/4" STL ASTM A-36
1	13		PLATE 16"x 56"x1" STL ASTM A-36
4	12		PLATE 12"x 11"x1" STL ASTM A-36
2	11		TUBING, RECT 4"x2"x1/4" WALL (42" LG) STL, ASTM A-500
1	10		TUBING, RECT 4"x2"x1/4" WALL (89.5" LG) STL, ASTM A-500
4	9		TUBING, RECT 4"x3"x1/4" WALL (28" LG) STL, ASTM A-500
8	8		TUBING, RECT 4"x2"x1/4" WALL (48" LG) STL, ASTM A-500
2	7		TUBING, RECT 4"x4"x1/4" WALL (70" LG) STL, ASTM A-500
2	6		TUBING, RECT 6"x4"x1/4" WALL (40" LG) STL, ASTM A-500
2	5		TUBING, RECT 6"x4"x1/4" WALL (124" LG) STL, ASTM A-500
2	4		TUBING, RECT 6"x4"x3/8" WALL (80" LG) STL, ASTM A-500
2	3		TUBING, RECT 6"x4"x3/8" WALL (86" LG) STL, ASTM A-500
1	2		TUBING, RECT 6"x4"x3/8" WALL (86" LG) STL, ASTM A-500
1	1		TUBING, RECT 6"x4"x3/8" WALL (86" LG) STL, ASTM A-500

REV	ZONE	CHANGES	DWG BY	DATE	CHK BY	DATE	APP BY	DATE
C		ADD ø1 1/4 HOLES TO ITEM 13, SHT. 5 OF 5	ajdemell	11-27-2002				
B		CHANGE HOLE LOCATION & PLATE WIDTH, ITEMS 12, 13 & 16	ajdemell	11-18-2002				

UNLESS OTHERWISE SPECIFIED
TOLERANCES: .X ± - FRAC. ± - ; .XX ± - ANGLES ± ° ; .XXX ± - FINISH 125√
THREADS ARE CLASS 2
CHAMFER ENDS OF ALL SCREW THREADS 30° CUT 1.5 PITCH THRU BELIEF WITH ROUND NOSE TOOL ON MACHINE CUT THREADS.
BREAK EDGES .016 MAX. ON MACHINED WORK.
REMOVE BURRS WELD SPLATTER & LOOSE SCALE
REFERENCES: ANSI Y14.5 & B46.1

SHOP ORDERS
ACCT. NO. | SERIAL NO.
DATE ISSD. | DATE REQD. | NO. REQD.
DELIVER TO | IDENT. METH. | SEE NOTES
SURFACE TREATMENT: SEE NOTES
DWG BY: ajdemell DATE: 10-04-2002
CHK BY: ajdemell DATE: 11-07-2002
APP BY: kelez DATE: 11-07-2002

LAWRENCE BERKELEY LABORATORY
UNIVERSITY OF CALIFORNIA-BERKELEY
LIGHT SOURCE - BEND MAGNET BEAMLINES
BL 12.3.1 END STATION
MAIN FRAME WELDMENT

PATENT CLEAR	DWG. TYPE	SHOWN ON	SCALE 1:5	DO NOT SCALE PRINTS
MICROFILMED	DESIGN ACCT. NO.	CATEGORY CODE	DWG. NO. 26A3206	SIZE C / REV.
	-	AL6193		

SHEET 1 OF 5

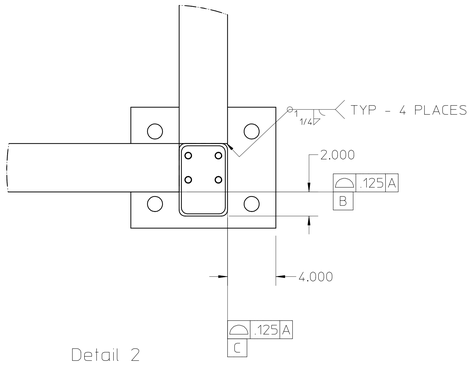

Detail 2
Front Column Position
SCALE 1:5

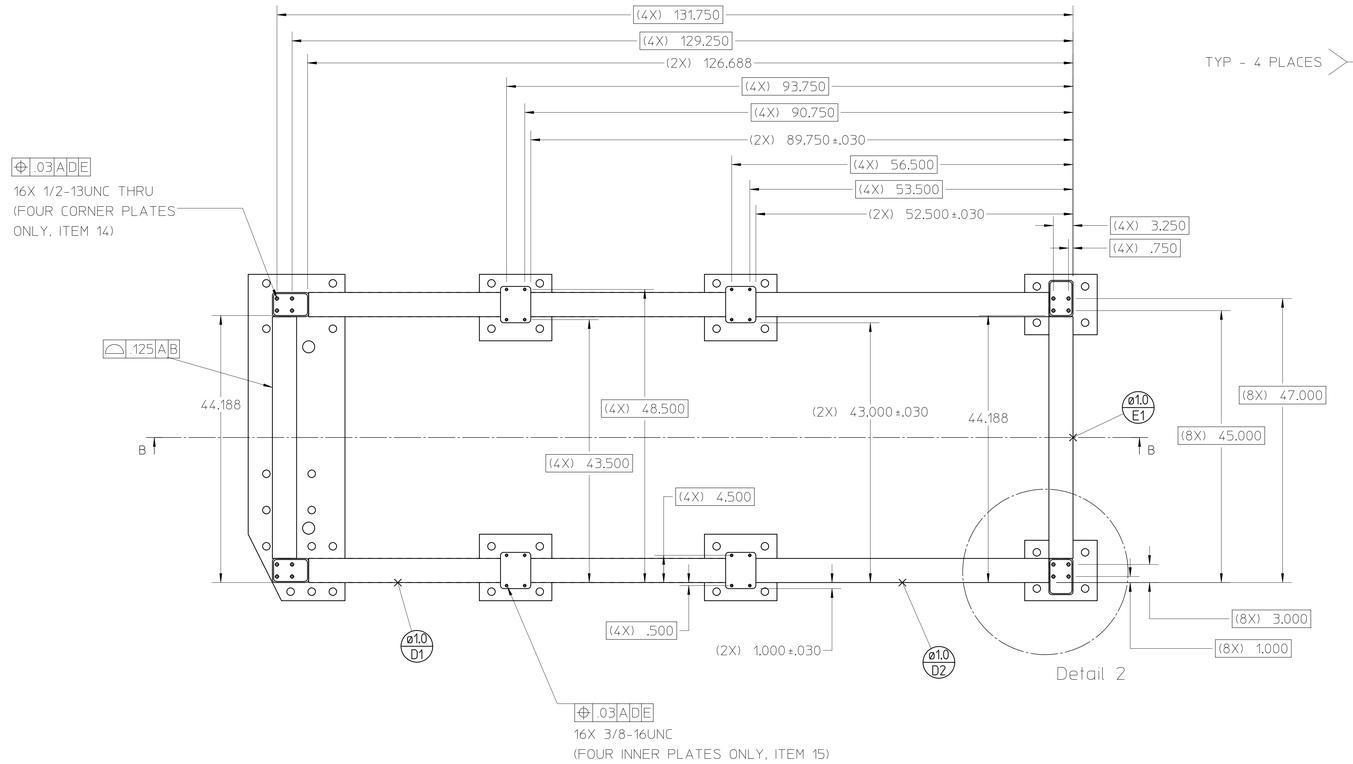

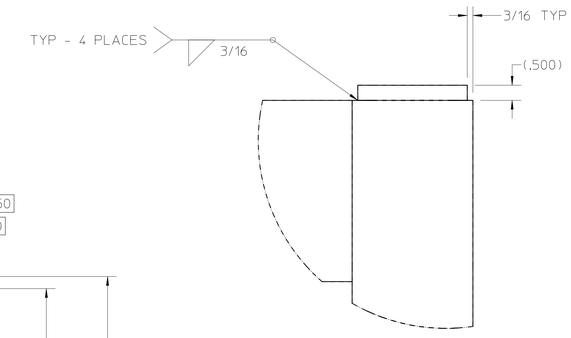

Detail 1
Corner Column Endcap Position
SCALE 1:2

ALL SECTION VIEWS
ARE ON NEXT SHEET

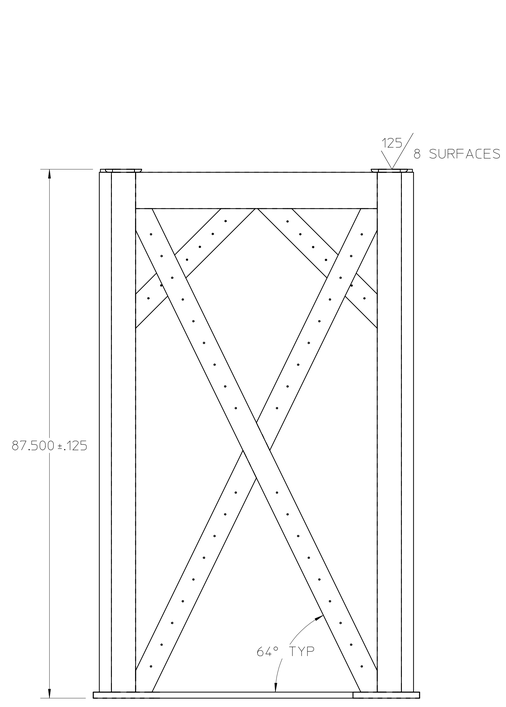

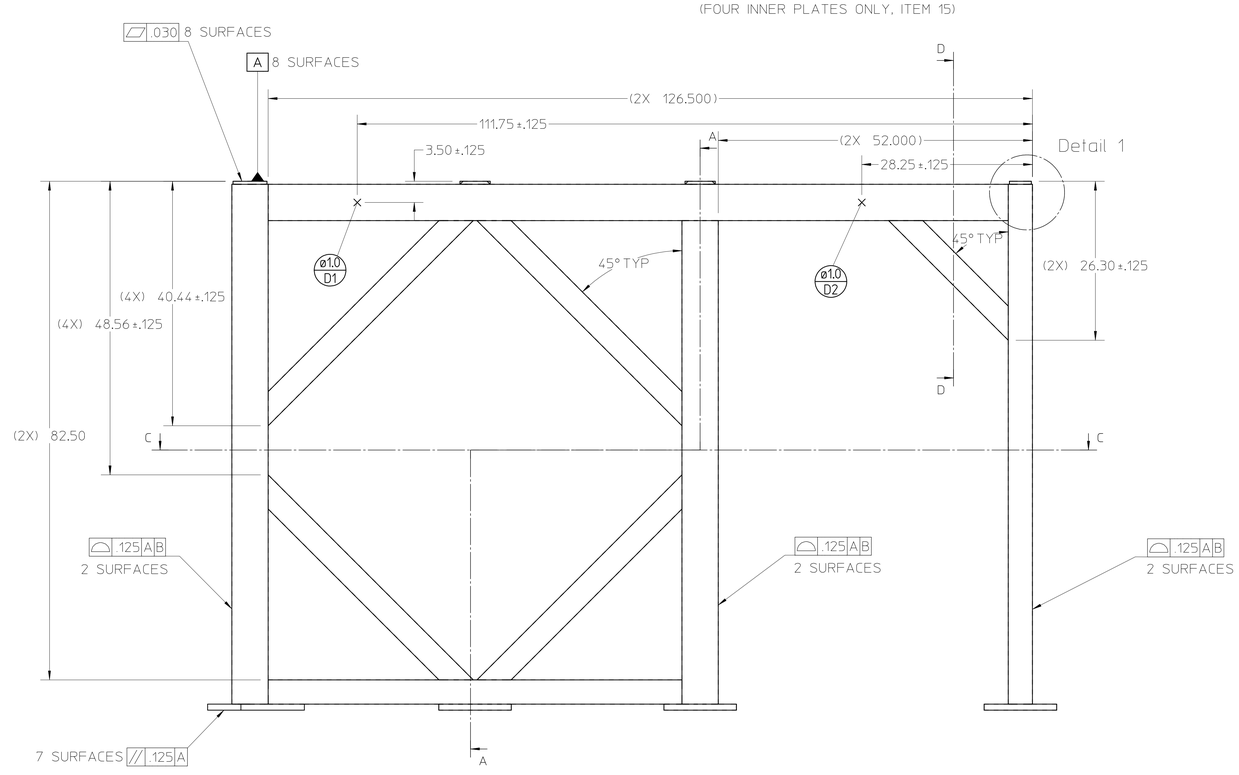

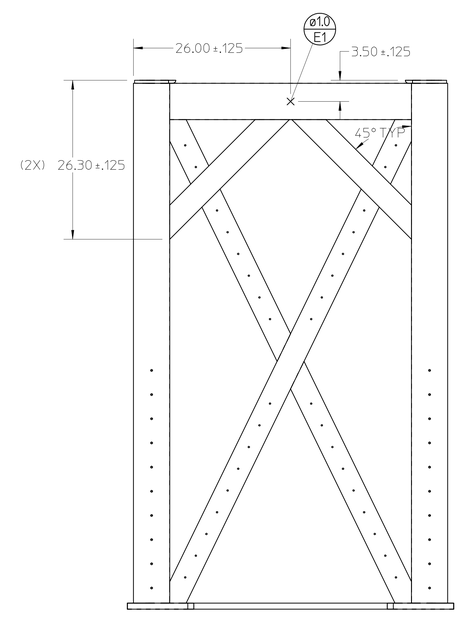

26A3206C

NOTES (UNLESS OTHERWISE SPECIFIED)

1. THIS FRAME IS A WELDED FABRICATION AND ALL WELDS ARE 1/4 CONTINIOUS FILLET TYPE UNLESS OTHERWISE SPECIFIED.

2. THE MATERIAL THICKNESSES AND LENGTHS SPECIFIED ON ALL ITEMS ON THIS SHEET ARE FINISHED SIZES AND DO NOT INCLUDE ANY CUTTING OR MACHINING ALLOWANCES IN THE FINAL ASSEMBLY.

REV	ZONE	CHANGES	DWG BY	DATE	CHK BY	DATE	APP BY	DATE
C		ADD ø1 1/4 HOLES TO ITEM 13, SHT. 5 OF 5	ajdemell	11-27-2002				
B		CHANGE HOLE LOCATION & PLATE WIDTH, ITEMS 12, 13 & 16	ajdemell	11-18-2002				

UNLESS OTHERWISE SPECIFIED
TOLERANCES: .X ± .030 FRAC. ± 1/16; .XX ± .010 ANGLES ± 1°; .XXX ± .005 FINISH 125
THREADS ARE CLASS 2
CHAMFER ENDS OF ALL SCREW THREADS 30°
CUT 1.5 PITCH THRD RELIEF WITH ROUND NOSE TOOL ON MACHINE CUT THREADS.
BREAK EDGES .016 MAX. ON MACHINED WORK.
REMOVE BURRS WELD SPLATTER & LOOSE SCALE
REFERENCES: ANSI Y14.5 & B46.1

SHOP ORDERS
ACCT. NO. | SERIAL NO.
DATE ISSD. | DATE REQD. | NO. REQD.
DELIVER TO | IDENT. METH. | SEE NOTES
SURFACE TREATMENT
DWG. BY ajdemell DATE 10-04-2002
CHK. BY ajdemell DATE 11-07-2002
APP. BY kelez DATE 11-07-2002

LAWRENCE BERKELEY LABORATORY
UNIVERSITY OF CALIFORNIA-BERKELEY
LIGHT SOURCE - BEND MAGNET BEAMLINES
BL 12.3.1 END STATION
MAIN FRAME WELDMENT

PATENT CLEAR	DWG. TYPE	SHOWN ON	SCALE 1 : 10	DO NOT SCALE PRINTS
MICROFILMED	DESIGN ACCT. NO. –	CATEGORY CODE AL6193	DWG. NO. 26A3206	SIZE / REV. C

SHEET 2 OF 5

NOTES (UNLESS OTHERWISE SPECIFIED)

1. THIS FRAME IS A WELDED FABRICATION AND ALL WELDS ARE 1/4 CONTINIOUS FILLET TYPE UNLESS OTHERWISE SPECIFIED.

2. THE MATERIAL THICKNESSES AND LENGTHS SPECIFIED ON ALL ITEMS ON THIS SHEET ARE FINISHED SIZES AND DO NOT INCLUDE ANY CUTTING OR MACHINING ALLOWANCES IN THE FINAL ASSEMBLY.

ALL SECTION VIEWS ARE ON THIS SHEET

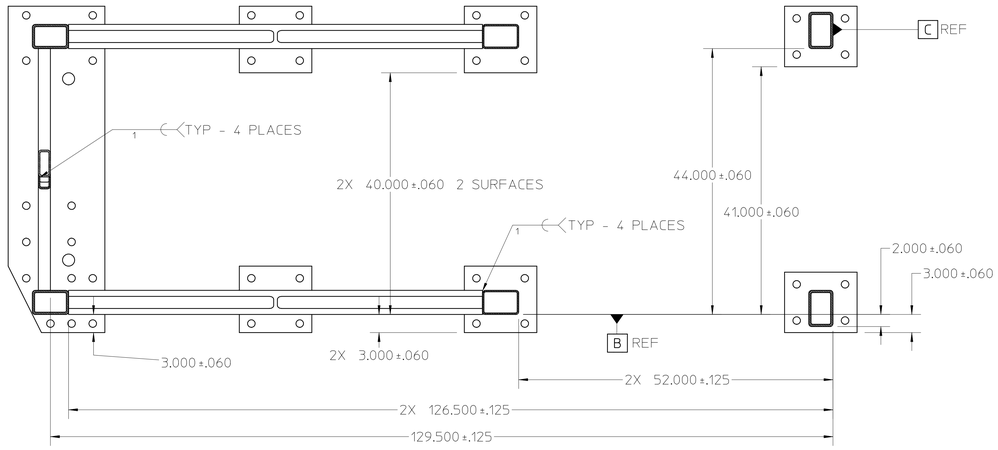

SECTION C-C

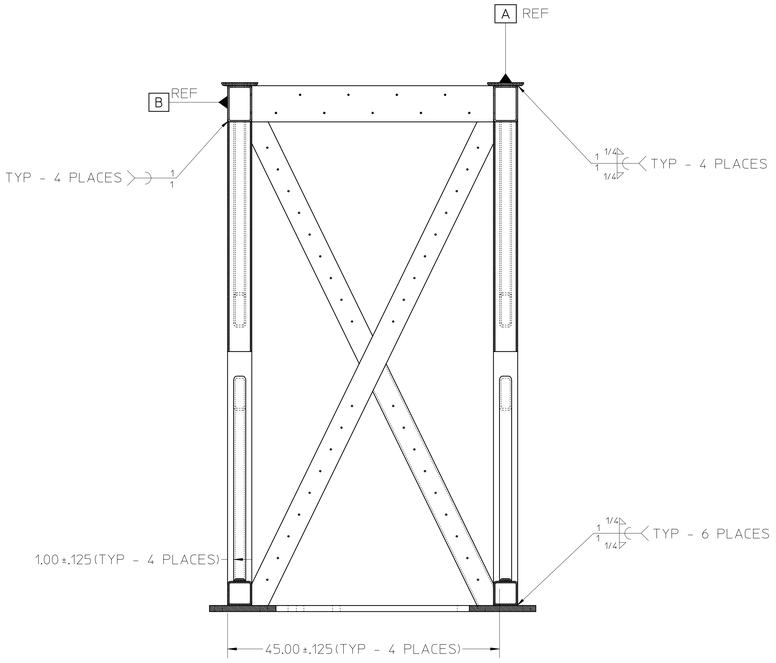

SECTION A-A

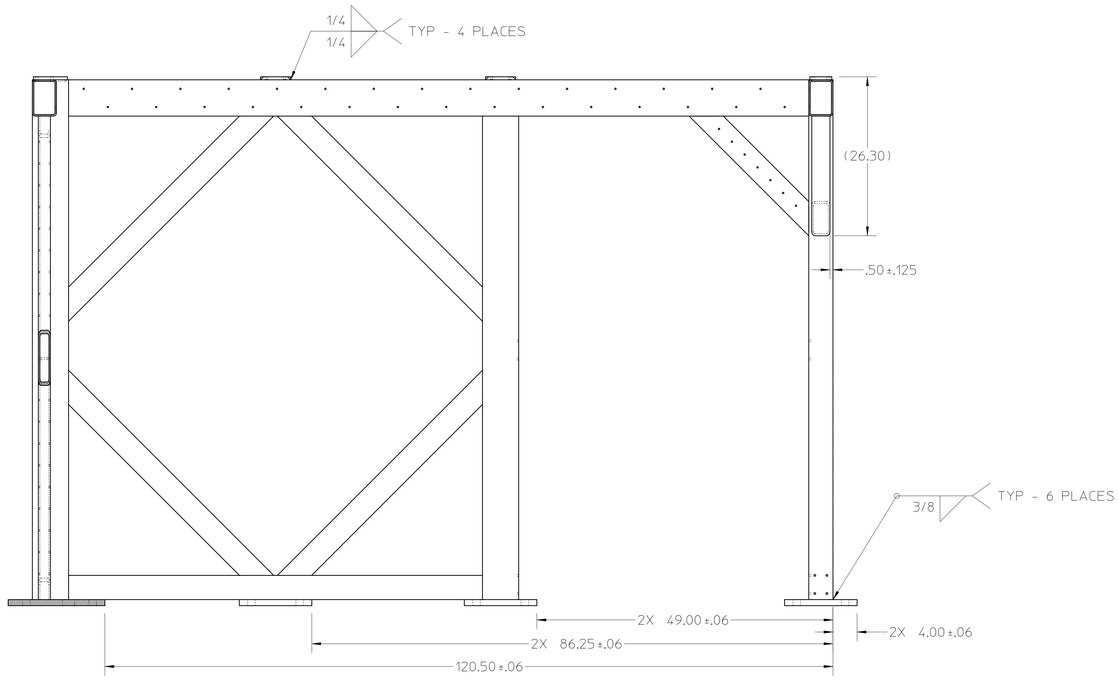

SECTION B-B

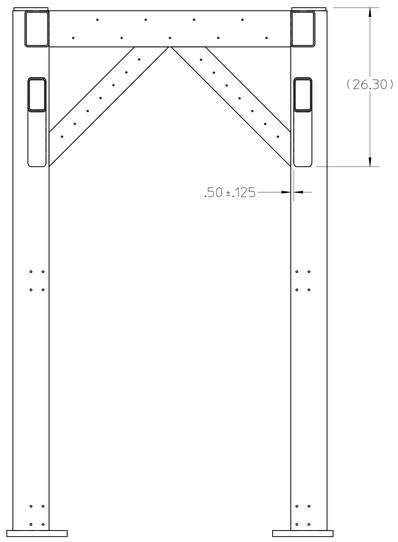

SECTION D-D

26A3206C

REV	ZONE	CHANGES	DWG BY	DATE	CHK BY	DATE	APP BY	DATE
C		ADD ø1 1/4 HOLES TO ITEM 13. SHT. 5 OF 5	ajdemell	11-27-2002				
B		CHANGE HOLE LOCATION & PLATE WIDTH. ITEMS 12. 13 & 16.	ajdemell	11-18-2002				

UNLESS OTHERWISE SPECIFIED
TOLERANCES
.X ± .030 FRAC. ± 1/16
.XX ± .010 ANGLES ± 1°
.XXX ± .005 FINISH 125
THREADS ARE CLASS 2
CHAMFER ENDS OF ALL SCREW THREADS 30°.
CUT 1.5 PITCH THRD RELIEF WITH ROUND NOSE TOOL ON MACHINE CUT THREADS.
BREAK EDGES .016 MAX. ON MACHINED WORK.
REMOVE BURRS WELD SPLATTER & LOOSE SCALE
REFERENCES: ANSI Y14.5 & B46.1

SHOP ORDERS
ACCT. NO. | SERIAL NO.
DATE ISSD. | DATE REQD. | NO. REQD.
DELIVER TO | IDENT METH. | SEE NOTES
SURFACE TREATMENT
DWG. BY: ajdemell | DATE: 10-04-2002
CHK. BY: ajdemell | DATE: 11-07-2002
APP. BY: kelez | DATE: 11-07-2002

LAWRENCE BERKELEY LABORATORY
UNIVERSITY OF CALIFORNIA-BERKELEY
LIGHT SOURCE - BEND MAGNET BEAMLINES
BL 12.3.1 END STATION
MAIN FRAME WELDMENT

PATENT CLEAR	DWG. TYPE	SHOWN ON	SCALE 1 : 10	DO NOT SCALE PRINTS
MICROFILMED	DESIGN ACCT. NO. –	CATEGORY CODE AL6193	DWG. NO. 26A3206	SIZE C / REV.

SHEET 3 OF 5

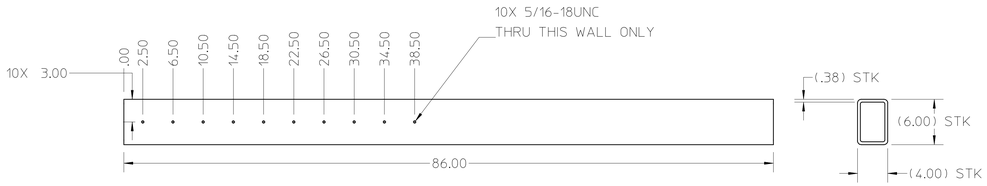

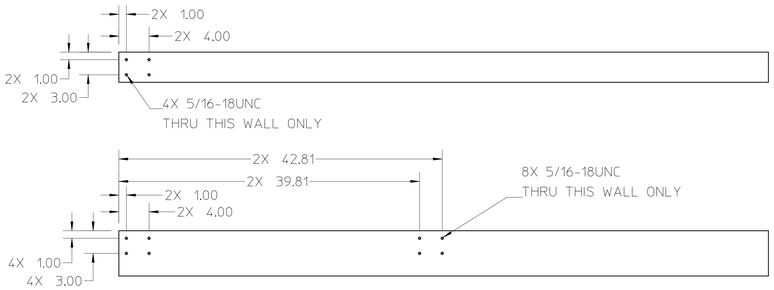

ITEM ① DETAIL

LEFT VERTICAL COLUMN

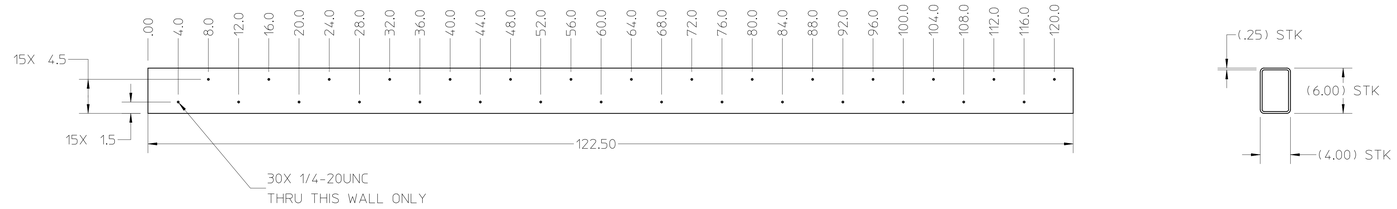

ITEM ⑤ DETAIL

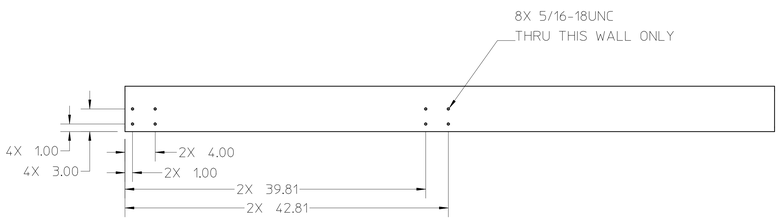

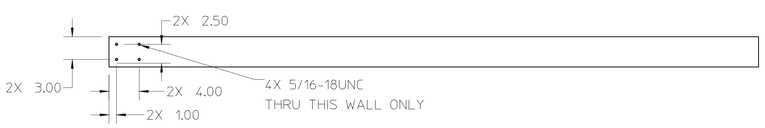

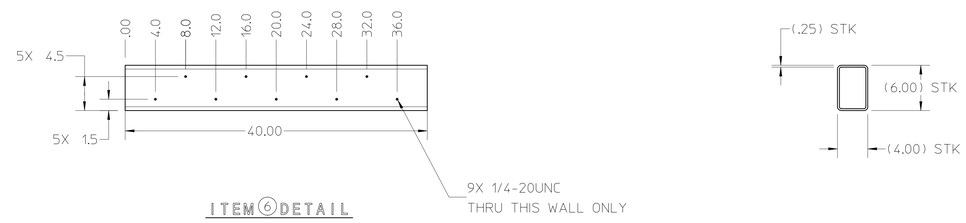

ITEM ⑥ DETAIL

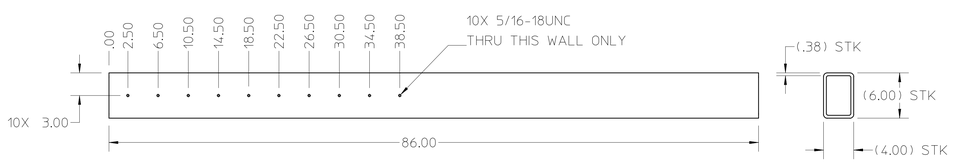

ITEM ② DETAIL

RIGHT VERTICAL COLUMN

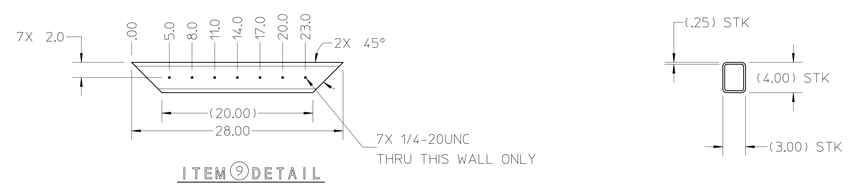

ITEM ⑨ DETAIL

SCALE 1:8

26A3206C

REV	ZONE	CHANGES	DWG BY	DATE	CHK BY	DATE	APP BY	DATE
C		ADD ø1 1/4 HOLES TO ITEM 13, SHT. 5 OF 5	ajdemell	11-27-2002				
B		CHANGE HOLE LOCATION & PLATE WIDTH, ITEMS 12, 13 & 16	ajdemell	11-18-2002				

UNLESS OTHERWISE SPECIFIED
TOLERANCES: .X ± .030 FRAC. ± 1/16; .XX ± .010 ANGLES ± 1°; .XXX ± .005 FINISH 125
THREADS ARE CLASS 2
CHAMFER ENDS OF ALL SCREW THREADS 30°
CUT 1.5 PITCH THRD RELIEF WITH ROUND NOSE TOOL ON MACHINE CUT THREADS.
BREAK EDGES .016 MAX. ON MACHINED WORK
REMOVE BURRS WELD SPLATTER & LOOSE SCALE
REFERENCES: ANSI Y14.5 & B46.1.

SHOP ORDERS
ACCT. NO. | SERIAL NO.
DATE ISSD. | DATE REQD. | NO. REQD.
DELIVER TO | IDENT METH. | SEE NOTES
SURFACE TREATMENT
DWG BY: ajdemell DATE 10-04-2002
CHK BY: ajdemell DATE 11-07-2002
APP BY: kelez DATE 11-07-2002

LAWRENCE BERKELEY LABORATORY
UNIVERSITY OF CALIFORNIA-BERKELEY
LIGHT SOURCE - BEND MAGNET BEAMLINES
BL 12.3.1 END STATION
MAIN FRAME WELDMENT

PATENT CLEAR	DWG. TYPE	SHOWN ON	SCALE 1:8	DO NOT SCALE PRINTS
MICROFILMED	DESIGN ACCT. NO.	CATEGORY CODE	DWG. NO. 26A3206	SIZE C / REV.
	–	AL6193		

SHEET 4 OF 5

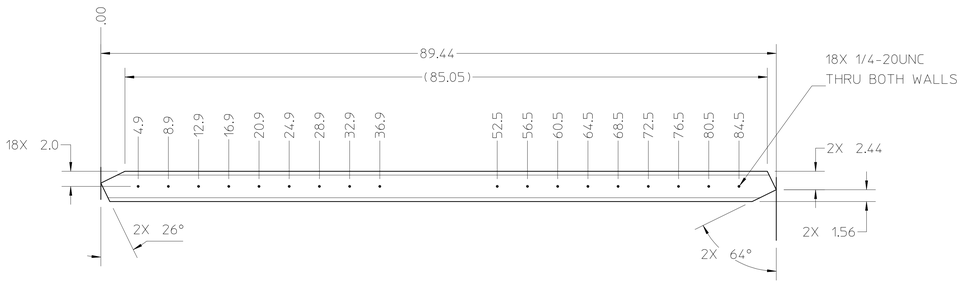

ITEM 10 DETAIL
SCALE 1:8

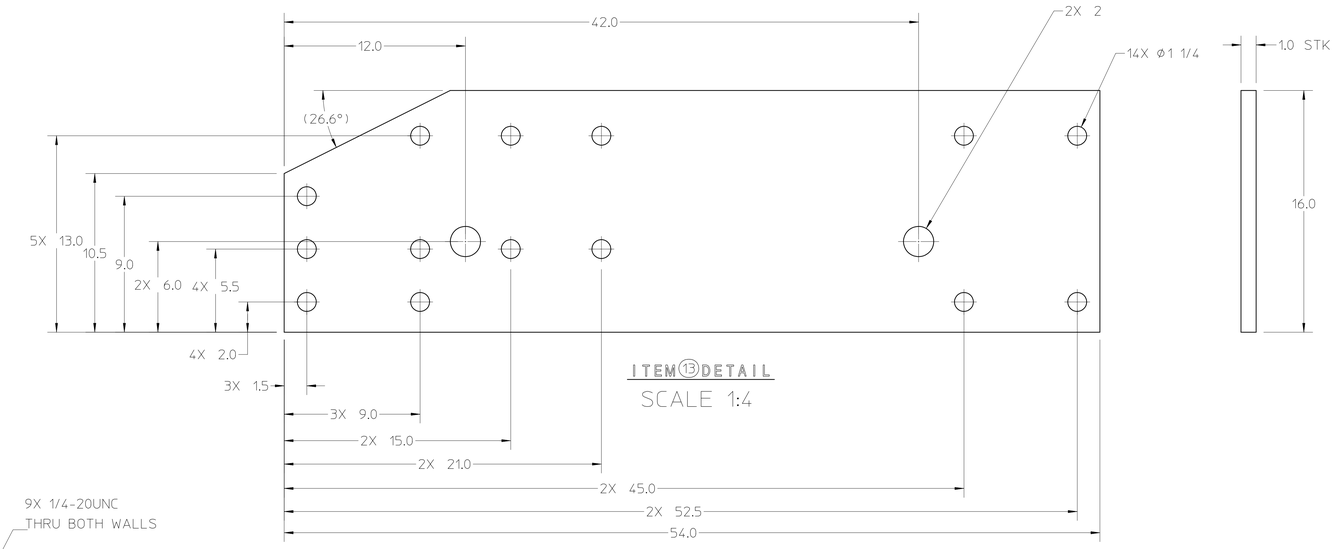

ITEM 13 DETAIL
SCALE 1:4

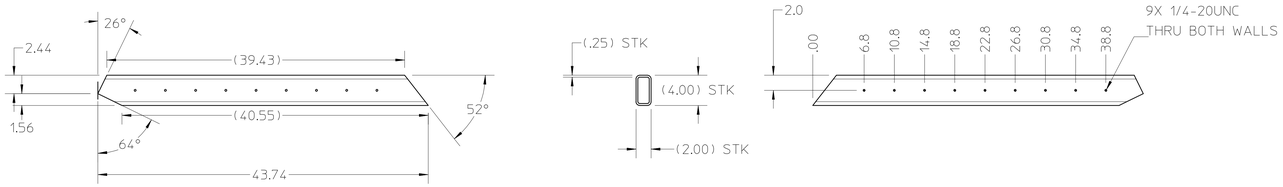

ITEM 11 DETAIL
SCALE 1:8

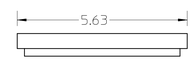

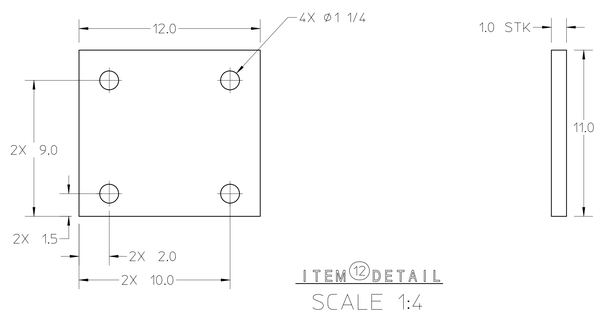

ITEM 12 DETAIL
SCALE 1:4

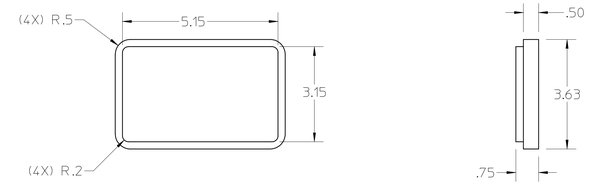

ITEM 14 DETAIL
SCALE 1:2

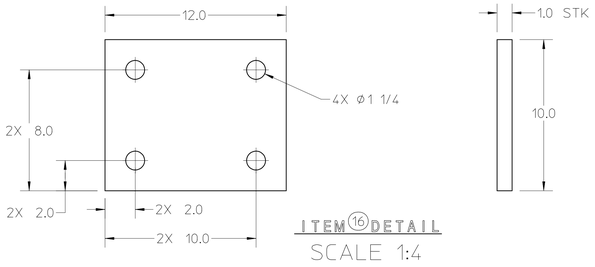

ITEM 16 DETAIL
SCALE 1:4

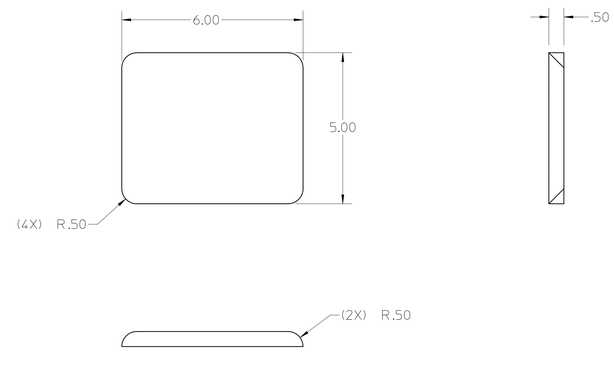

ITEM 15 DETAIL
SCALE 1:2

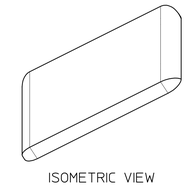

ISOMETRIC VIEW
SCALE 1:2

26A3206C

NOTES (UNLESS OTHERWISE SPECIFIED)

1. SAW CUT PERMISSIBLE FOR ITEMS 9 AND 11
2. EDGES MAY BE FLAME CUT & HAND SANDED ON ITEMS 12, 13 AND 16.
3. MATERIAL THICKNESSES AND LENGTHS SPECIFIED ON ALL ITEMS ON THIS SHEET ARE FINISHED SIZES AND DO NOT INCLUDE ANY CUTTING OR MACHINING ALLOWANCES IN THE FINAL ASSEMBLY.

REV	ZONE	CHANGES	DWG BY	DATE	CHK BY	DATE	APP BY	DATE
C		ADD ø1 1/4 HOLES TO ITEM 13, SHT. 5 OF 5	ajdemell	11-27-2002				
B		CHANGE HOLE LOCATION & PLATE WIDTH. ITEMS 12, 13 & 16	ajdemell	11-18-2002				

UNLESS OTHERWISE SPECIFIED
TOLERANCES: .X ± .030 FRAC. ± 1/16; .XX ± .010 ANGLES ± 1°; .XXX ± .005 FINISH 125
THREADS ARE CLASS 2
CHAMFER ENDS OF ALL SCREW THREADS 30°.
CUT 1.5 PITCH THRD RELIEF WITH ROUND NOSE TOOL ON MACHINE CUT THREADS.
BREAK EDGES .016 MAX. ON MACHINED WORK.
REMOVE BURRS WELD SPLATTER & LOOSE SCALE
REFERENCES: ANSI Y14.5 & B46.1

SHOP ORDERS
ACCT. NO. | SERIAL NO.
DATE ISSD. | DATE REQD. | NO. REQD.
DELIVER TO. | IDENT. METH. | SEE NOTES
SURFACE TREATMENT
DWG BY: ajdemell DATE: 10-04-2002
CHK BY: ajdemell DATE: 11-07-2002
APP BY: kelez DATE: 11-07-2002

LAWRENCE BERKELEY LABORATORY
UNIVERSITY OF CALIFORNIA-BERKELEY
LIGHT SOURCE - BEND MAGNET BEAMLINES
BL 12.3.1 END STATION
MAIN FRAME WELDMENT

PATENT CLEAR	DWG. TYPE	SHOWN ON	SCALE 1 : 4	DO NOT SCALE PRINTS
MICROFILMED	DESIGN ACCT. NO. –	CATEGORY CODE AL6193	DWG. NO. 26A3206	SIZE C / REV.

SHEET 5 OF 5