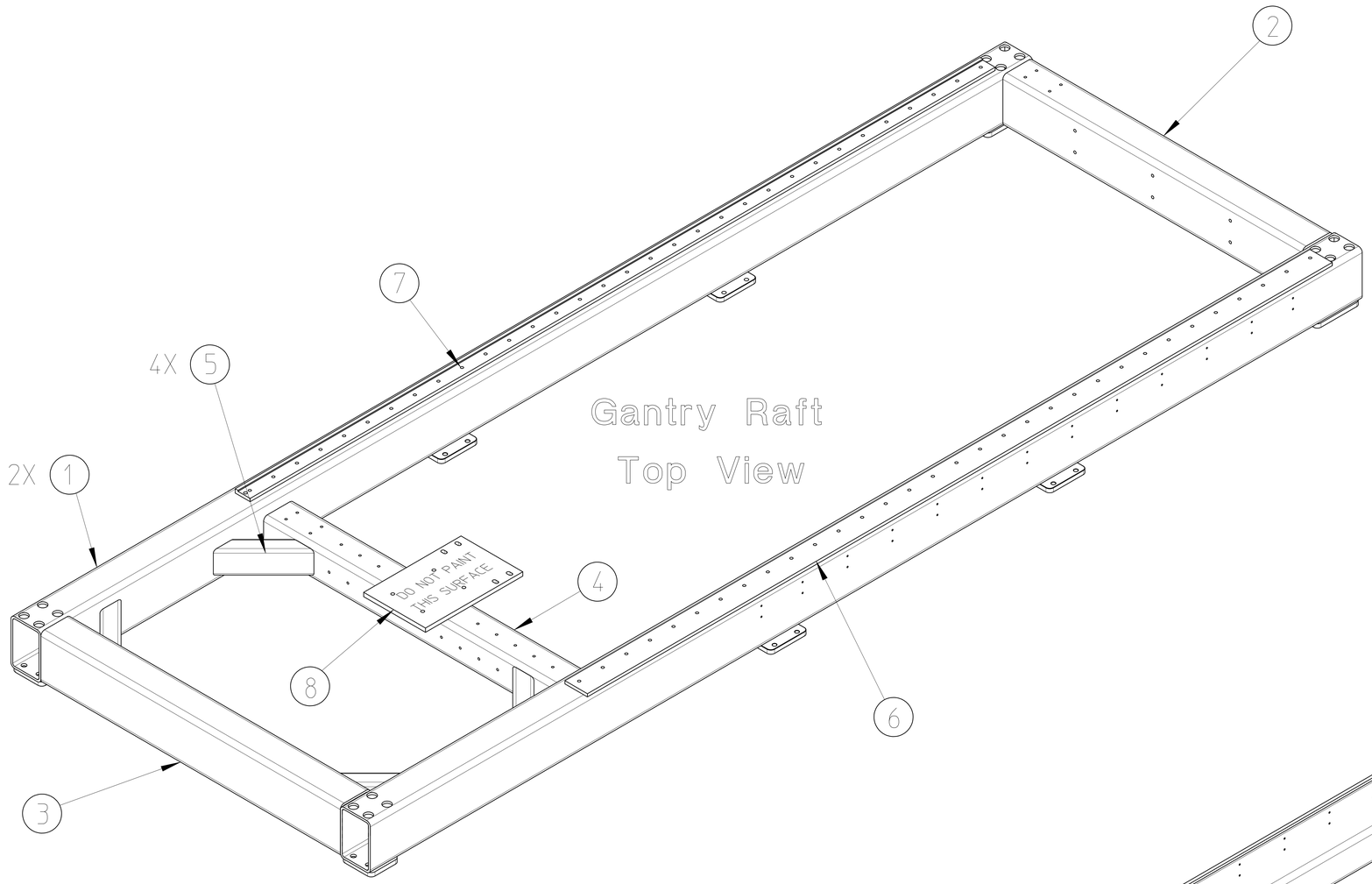

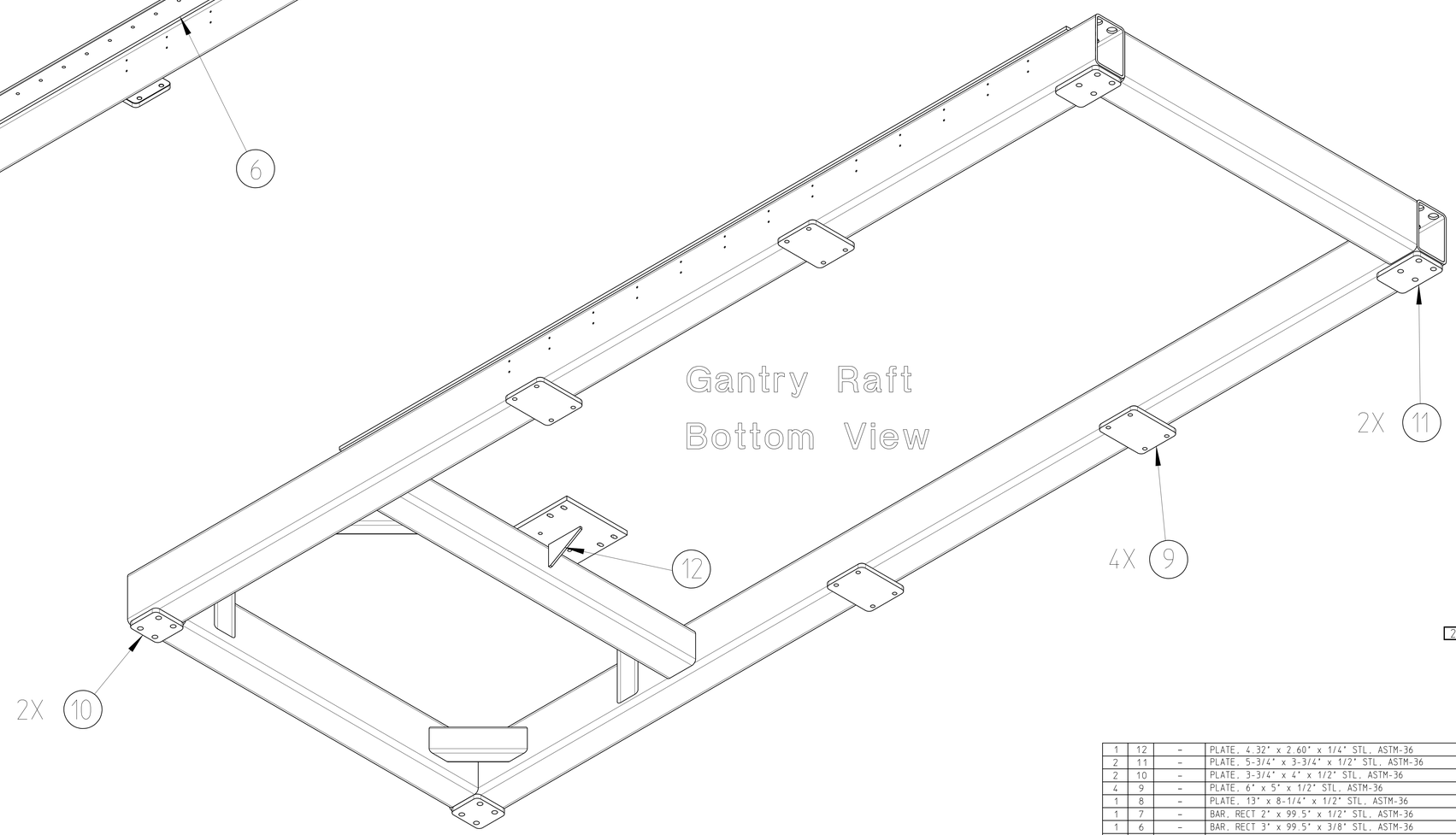

NOTES: (UNLESS OTHERWISE SPECIFIED)

1. ALL DIMENSIONS ARE IN INCHES.

1. ALL WELD SYMBOLS PER ANSI/AWS/A2.4-1993.

2. WELDS PER ANSI/AWS/D1.1-1990.

3. SAW CUT PERMISSIBLE FOR ITEMS 1 THRU 5 EXCEPT FOR TAPPED AND MACHINED HOLES.

4. USE OF 1/8" DIAMETER ROD AS A FILLER FOR ALL FLARE BEVEL WELDS IS PERMISSIBLE.

5. FOR ITEM 1, WHICH WILL HAVE OPEN ENDS, REMOVE ANY EXCESS WELD FROM INSIDE TUBE - 3" IN (GRINDING OK).

6. STRESS RELIEVE ENTIRE STRUCTURE AFTER WELDING.

7. SURFACE TREATMENT:
   A) ALL SURFACES TO BE FREE OF BURRS, CHIPS, SCALE, SLAG, RUST, DIRT, OIL AND GREASE.

   B) ALL SURFACES (UNLESS OTHERWISE INDICATED) SHALL BE PAINTED WITH RUSTOLEUM LABOR SAVER HIGH PERFORMANCE POLYURETHANE 9800 DTM URETHANE MASTIC SYSTEM #9879 GLOSS BLACK OR EQUIVALENT.

8. DO NOT PAINT THE MACHINED SURFACES ON ITEMS 6 THROUGH 7 AND 9 THROUGH 11.

9. DO NOT PAINT THE INDICATED SURFACE ON ITEM 8.

10. PLUG ALL TAPPED HOLES BEFORE PAINTING.

11. APPROXIMATE WEIGHT: 640 lbs.

26A3196A

REQD	ITEM	PART NO.	DESCRIPTION
1	12	-	PLATE, 4.32" x 2.60" x 1/4" STL, ASTM-36
2	11	-	PLATE, 5-3/4" x 3-3/4" x 1/2" STL, ASTM-36
2	10	-	PLATE, 3-3/4" x 4" x 1/2" STL, ASTM-36
4	9	-	PLATE, 6" x 5" x 1/2" STL, ASTM-36
1	8	-	PLATE, 13" x 8-1/4" x 1/2" STL, ASTM-36
1	7	-	BAR, RECT 2" x 99.5" x 1/2" STL, ASTM-36
1	6	-	BAR, RECT 3" x 99.5" x 3/8" STL, ASTM-36
4	5	-	TUBING, RECT 3" x 2" x 3/16" WALL (9-1/2" LG) STL, ASTM-500
1	4	-	TUBING, RECT 4" x 4" x 1/4" WALL (40" LG) STL, ASTM-500
1	3	-	TUBING, RECT 6" x 4" x 1/4" WALL (40" LG) STL, ASTM-500
1	2	-	TUBING, RECT 6" x 4" x 3/8" WALL (40" LG) STL, ASTM-500
2	1	-	TUBING, RECT 6" x 4" x 1/4" WALL (132.5" LG) STL, ASTM-500

REV	ZONE	CHANGES	DWG BY	DATE	CHK BY	DATE	APP BY	DATE

UNLESS OTHERWISE SPECIFIED
TOLERANCES: .X ± .030 FRAC. ±- ; .XX ± .010 ANGLES ± 1° ; .XXX ± .005 FINISH 125
THREADS ARE CLASS 2
CHAMFER ENDS OF ALL SCREW THREADS 30° CUT 1.5 PITCH THRD RELIEF WITH ROUND NOSE TOOL ON MACHINE CUT THREADS.
BREAK EDGES .016 MAX. ON MACHINED WORK
REMOVE BURRS WELD SPLATTER & LOOSE SCALE
REFERENCES: ANSI Y14.5 & B46.1

SHOP ORDERS
ACCT. NO. | SERIAL NO.
DATE ISSD. | DATE REQD. | NO. REQD.
DELIVER TO | IDENT. METH. | SEQ. NOTES
SURFACE TREATMENT: SEE NOTES
DWG BY: ajdemell DATE: 10-04-2002
CHK BY: ajdemell DATE: 11-07-2002
APP BY: kelez DATE: 11-07-2002

LAWRENCE BERKELEY LABORATORY
UNIVERSITY OF CALIFORNIA-BERKELEY
LIGHT SOURCE - BEND MAGNET BEAMLINES
BL 12.3.1 END STATION
GANTRY GUIDE RAFT WELDMENT

PATENT CLEAR	DWG. TYPE	SHOWN ON	SCALE 1:5	DO NOT SCALE PRINTS
	WELDMENT			
MICROFILMED	DESIGN ACCT. NO.	CATEGORY CODE	DWG. NO. 26A3196	SIZE A	REV.
	-	AL6193		

SHEET 1 OF 4

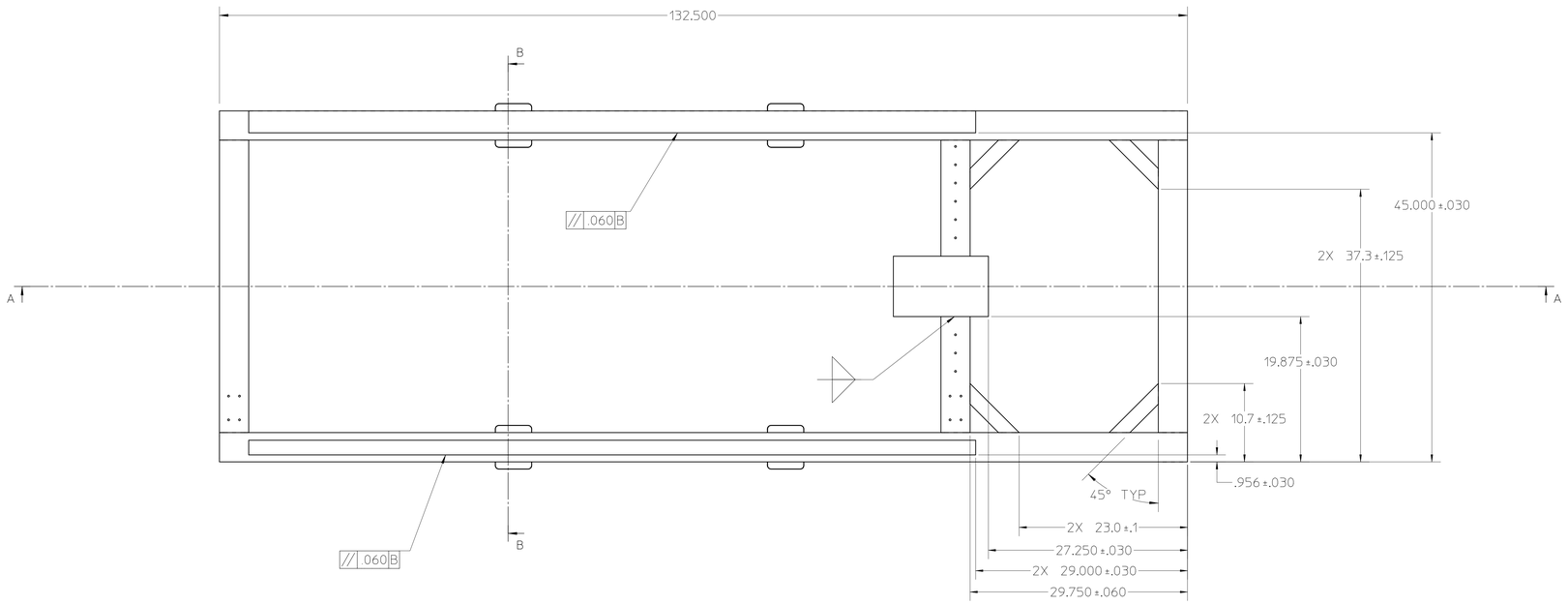

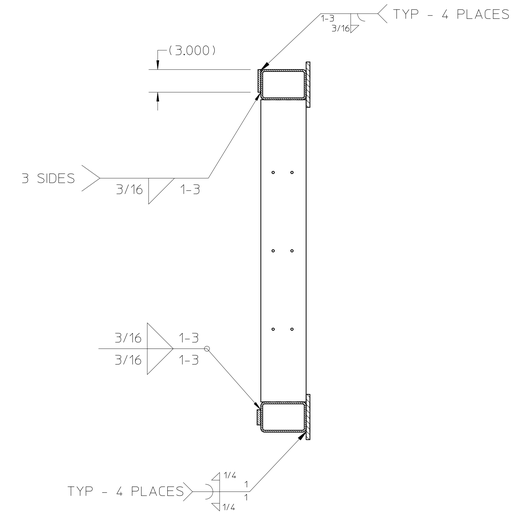

SECTION B-B

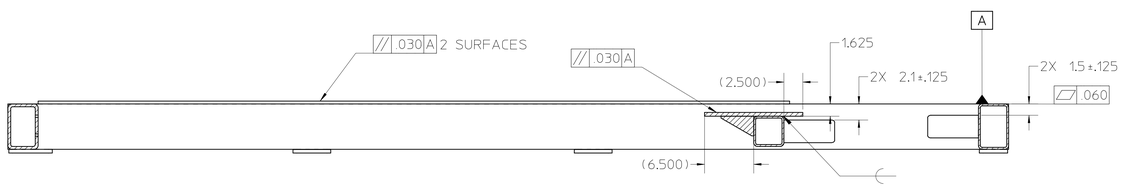

SECTION A-A

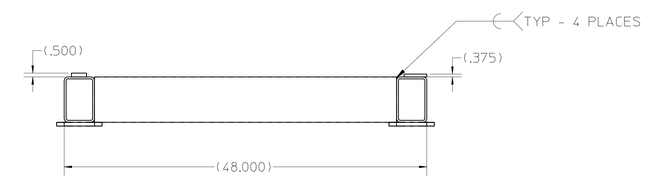

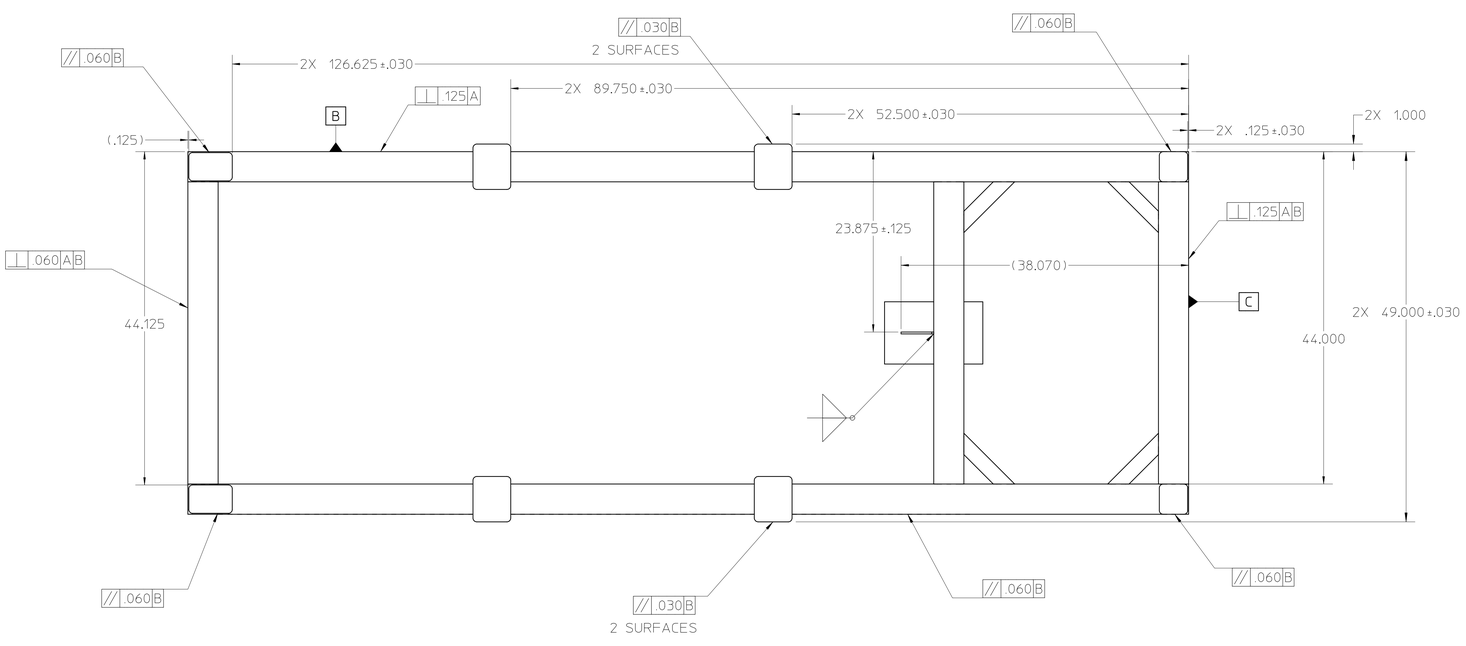

WELDING DETAILS

26A3196A

NOTES: (UNLESS OTHERWISE SPECIFIED)

1. THIS SHEET SHOWS DIMENSIONS FOR WELDING ONLY.
2. THIS FRAME IS A WELDED FABRICATION AND ALL WELDS ARE 1/4 CONTINIOUS FILET TYPE UNLESS OTHERWISE SPECIFIED.
3. THE MATERIAL THICKNESSES AND LENGTHS SPECIFIED ON ALL ITEMS ON THIS SHEET ARE FINISHED SIZES AND DO NOT INCLUDE ANY CUTTING OR MACHINING ALLOWANCES IN THE FINAL ASSEMBLY. (see sheet 3 for machining information).

REV	ZONE	CHANGES	DWG BY	DATE	CHK BY	DATE	APP BY	DATE

UNLESS OTHERWISE SPECIFIED
TOLERANCES: .X ± .030 FRAC. ± 1/16; .XX ± .010 ANGLES ± 1°; .XXX ± .005 FINISH 125
THREADS ARE CLASS 2
CHAMFER ENDS OF ALL SCREW THREADS 30°
CUT 1.5 PITCH THRD RELIEF WITH ROUND NOSE TOOL ON MACHINE CUT THREADS.
BREAK EDGES .016 MAX. ON MACHINED WORK
REMOVE BURRS WELD SPLATTER & LOOSE SCALE
REFERENCES: ANSI Y14.5 & B46.1

SHOP ORDERS
ACCT. NO.: SERIAL NO.:
DATE ISSD.: DATE REQD.: NO. REQD.:
DELIVER TO: IDENT. METH.: SEC. NOTES
SURFACE TREATMENT:
DWG. BY: ajdemell DATE: 10-04-2002
CHK. BY: ajdemell DATE: 11-07-2002
APP. BY: kelez DATE: 11-07-2002

LAWRENCE BERKELEY LABORATORY
UNIVERSITY OF CALIFORNIA-BERKELEY
LIGHT SOURCE - BEND MAGNET BEAMLINES
BL 12.3.1 END STATION
GANTRY GUIDE RAFT WELDMENT

PATENT CLEAR	DWG. TYPE	SHOWN ON	SCALE 1:8	DO NOT SCALE PRINTS
	WELDMENT			
MICROFILMED	DESIGN ACCT. NO.	CATEGORY CODE	DWG. NO. 26A3196	SIZE A	REV.
	–	AL6193		

SHEET 2 OF 4

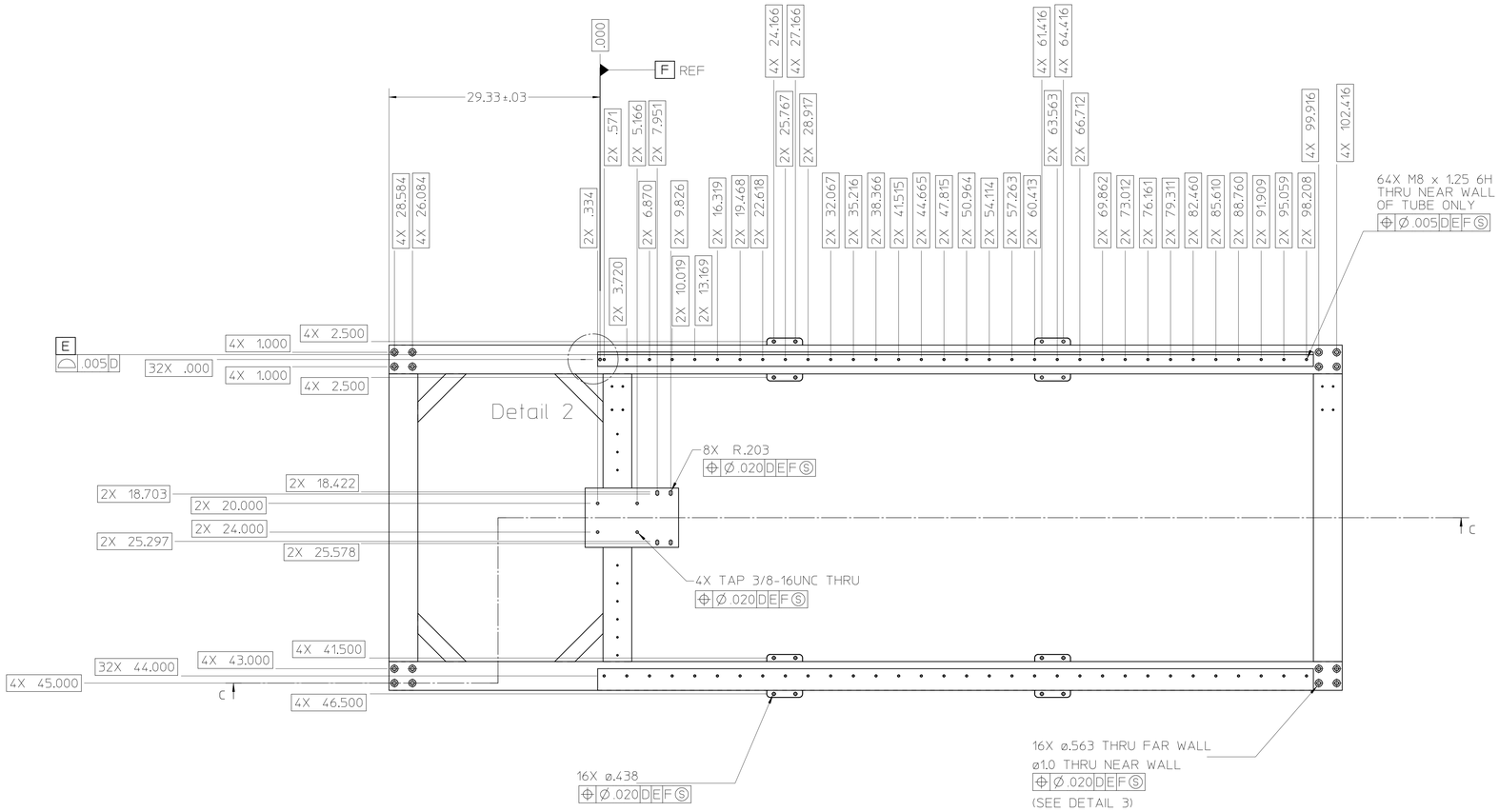

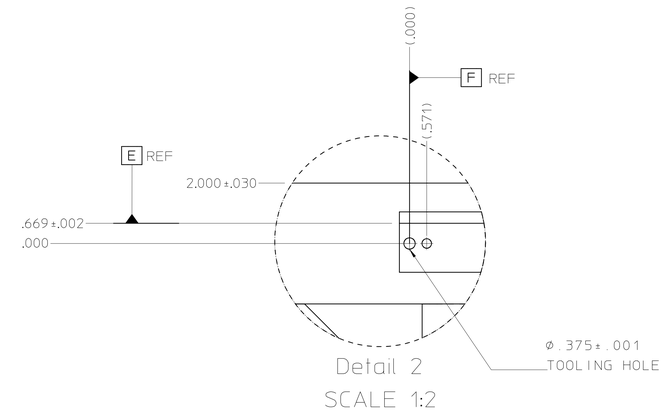

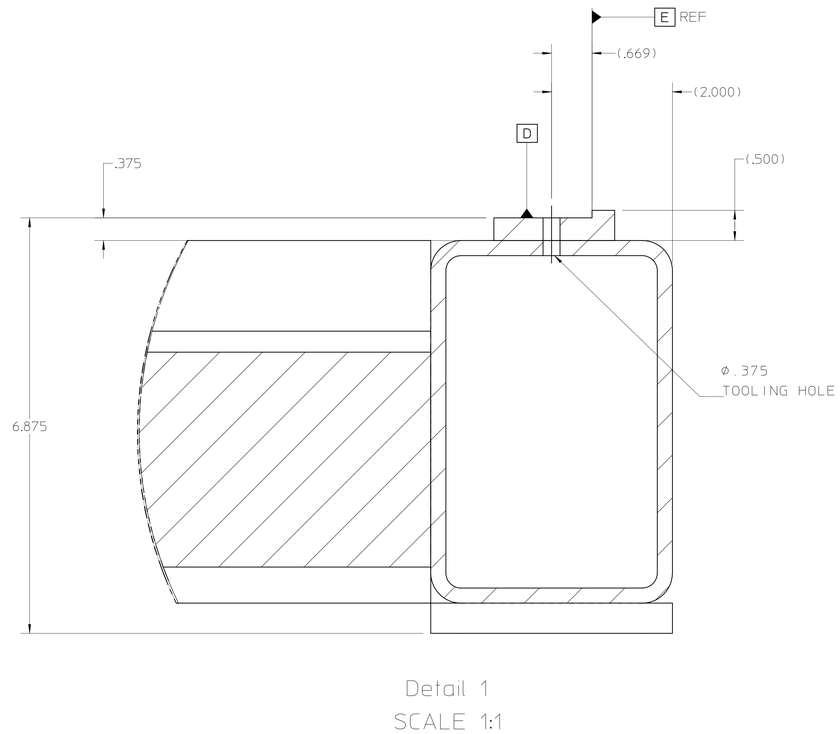

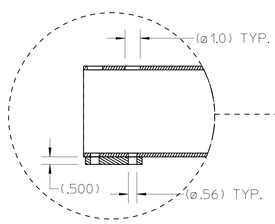

Detail 3
SCALE 1:4

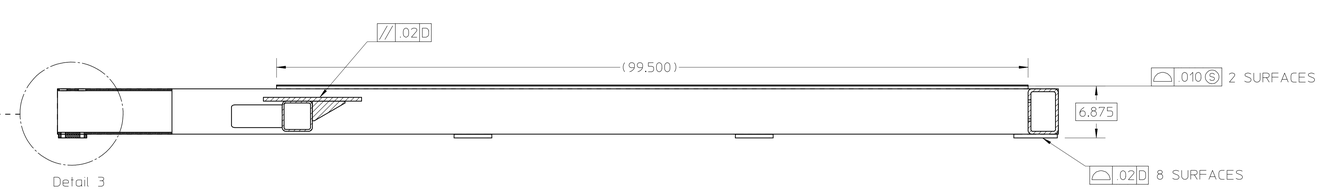

Detail 3

SECTION C-C

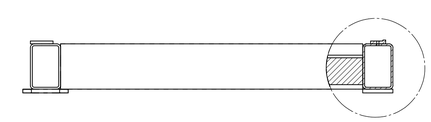

Detail 1
Cutaway 1

26A3196A

NOTES: (UNLESS OTHERWISE SPECIFIED)

1. THIS SHEET SHOWS DIMENSIONS FOR MACHINING ONLY.

2. THE MATERIAL THICKNESSES AND LENGTHS SPECIFIED ON ALL ITEMS ON THIS SHEET ARE FINISHED SIZES AND DO NOT INCLUDE ANY CUTTING OR MACHINING ALLOWANCES IN THE FINAL ASSEMBLY.

MACHINING DETAILS

REV	ZONE	CHANGES	DWG BY	DATE	CHK BY	DATE	APP BY	DATE

UNLESS OTHERWISE SPECIFIED
TOLERANCES: .X ± .030 FRAC. ± 1/16; .XX ± .010 ANGLES ± 1°; .XXX ± .005 FINISH 125
THREADS ARE CLASS 2
CHAMFER ENDS OF ALL SCREW THREADS 30°
CUT 1.5 PITCH THRD RELIEF WITH ROUND NOSE TOOL ON MACHINE CUT THREADS.
BREAK EDGES .016 MAX. ON MACHINED WORK
REMOVE BURRS WELD SPLATTER & LOOSE SCALE
REFERENCES: ANSI Y14.5 & B46.1

SHOP ORDERS
ACCT. NO. | SERIAL NO.
DATE ISSD. | DATE REQD. | NO. REQD.
DELIVER TO | IDENT. METH. | SEE NOTES
SURFACE TREATMENT
DWG BY: ajdemell DATE: 10-04-2002
CHK BY: ajdemell DATE: 11-07-2002
APP BY: kelez DATE: 11-07-2002

LAWRENCE BERKELEY LABORATORY
UNIVERSITY OF CALIFORNIA-BERKELEY
LIGHT SOURCE - BEND MAGNET BEAMLINES
BL 12.3.1 END STATION
GANTRY GUIDE RAFT WELDMENT

PATENT CLEAR	DWG. TYPE	SHOWN ON	SCALE 1 : 8	DO NOT SCALE PRINTS
	WELDMENT			
MICROFILMED	DESIGN ACCT. NO.	CATEGORY CODE	DWG. NO. 26A3196	SIZE / REV. A
	–	AL6193		

SHEET 3 OF 4

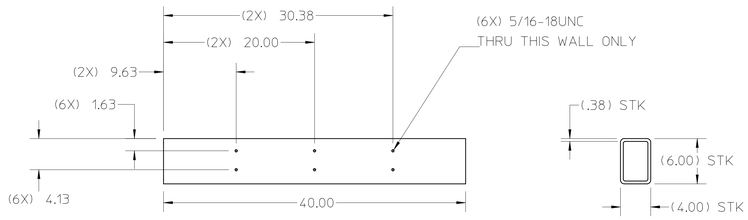

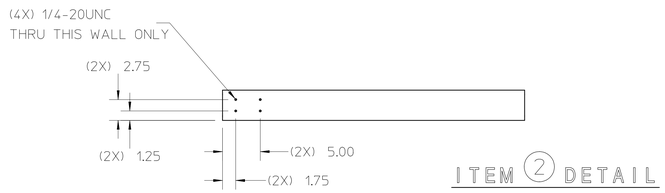

ITEM 2 DETAIL

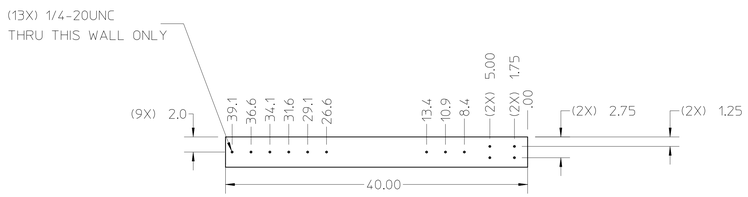

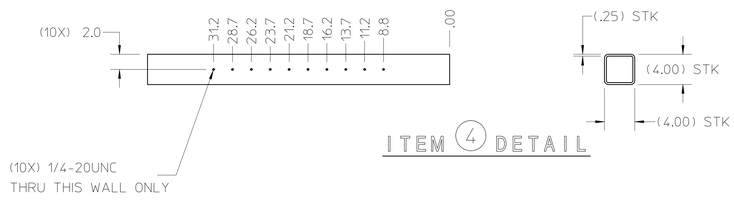

ITEM 4 DETAIL

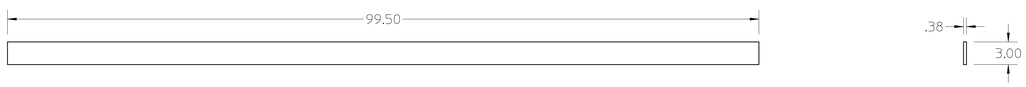

ITEM 6 DETAIL

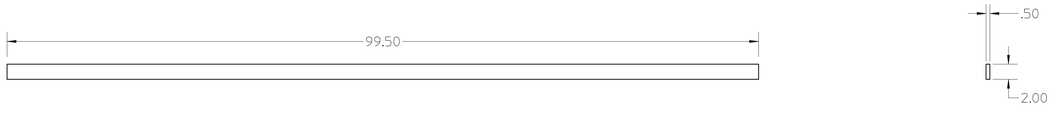

ITEM 7 DETAIL

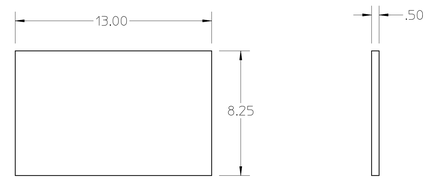

SCALE 1:4

ITEM 8 DETAIL

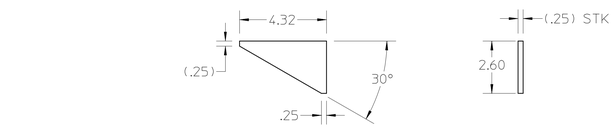

SCALE 1:2

ITEM 9 DETAIL

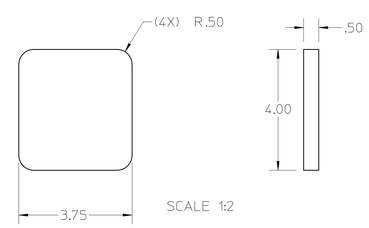

SCALE 1:2

ITEM 10 DETAIL

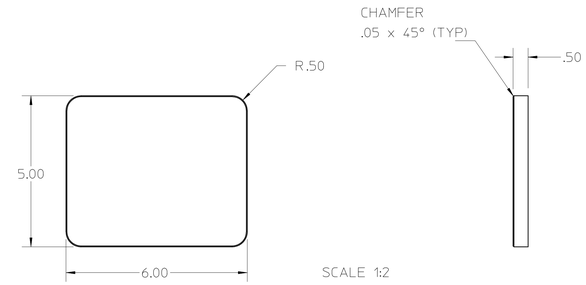

SCALE 1:3

ITEM 12 DETAIL

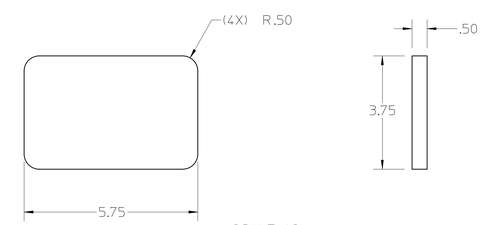

SCALE 1:2

ITEM 11 DETAIL

26A3196A

NOTES: (UNLESS OTHERWISE SPECIFIED)

1. THE MATERIAL THICKNESSES AND LENGTHS SPECIFIED ON ALL ITEMS ON THIS SHEET ARE FINISHED SIZES AND DO NOT INCLUDE ANY CUTTING OR MACHINING ALLOWANCES IN THE FINAL ASSEMBLY.

REV	ZONE	CHANGES	DWG BY	DATE	CHK BY	DATE	APP BY	DATE

UNLESS OTHERWISE SPECIFIED
TOLERANCES: .X ± .030 FRAC. ± 1/16; .XX ± .010 ANGLES ± 1°; .XXX ± .005 FINISH 125
THREADS ARE CLASS 2
CHAMFER ENDS OF ALL SCREW THREADS 30° (UT 1.5 PITCH THD RELIEF WITH ROUND NOSE TOOL ON MACHINE CUT THREADS.
BREAK EDGES .016 MAX. ON MACHINED WORK.
REMOVE BURRS WELD SPLATTER & LOOSE SCALE
REFERENCES: ANSI Y14.5 & B46.1

SHOP ORDERS
ACCT. NO. | SERIAL NO.
DATE ISSD. | DATE REQD. | NO. REQD.
DELIVER TO | IDENT. METH. SEE NOTES
SURFACE TREATMENT
DWG. BY: gjdemell — DATE 10-04-2002
CHK. BY: gjdemell — DATE 11-07-2002
APP. BY: kelez — DATE 11-07-2002

LAWRENCE BERKELEY LABORATORY
UNIVERSITY OF CALIFORNIA-BERKELEY
LIGHT SOURCE - BEND MAGNET BEAMLINES
BL 12.3.1 END STATION
GANTRY GUIDE RAFT WELDMENT

PATENT CLEAR	DWG. TYPE	SHOWN ON	SCALE 1:8	DO NOT SCALE PRINTS
	WELDMENT			
MICROFILMED	DESIGN ACCT. NO.	CATEGORY CODE	DWG. NO. 26A3196	SIZE A	REV.
	–	AL6193		

SHEET 4 OF 4