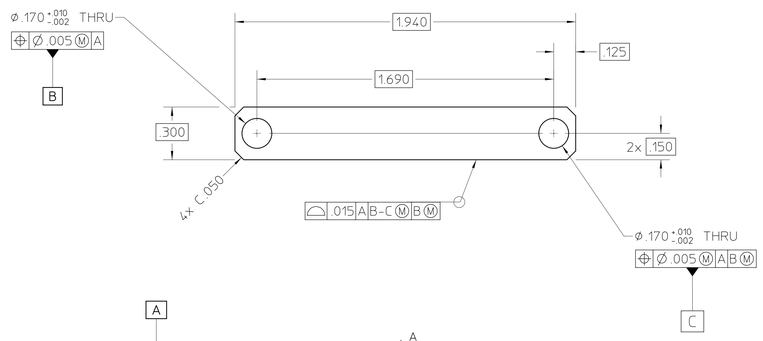

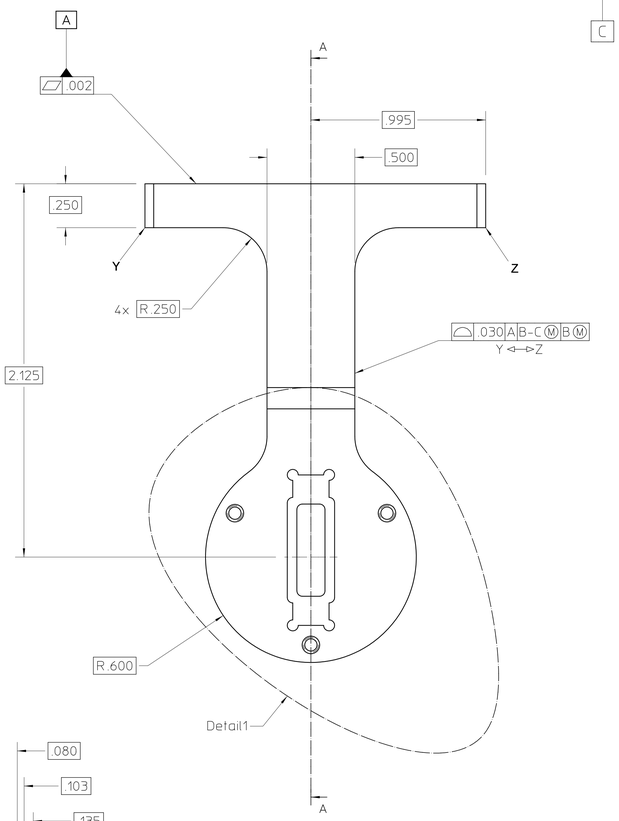

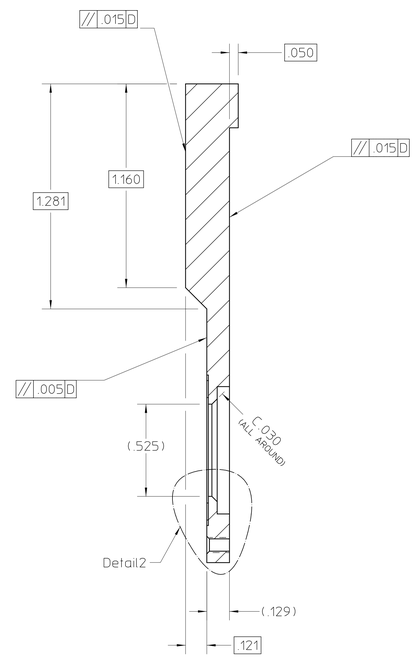

SECTION A-A

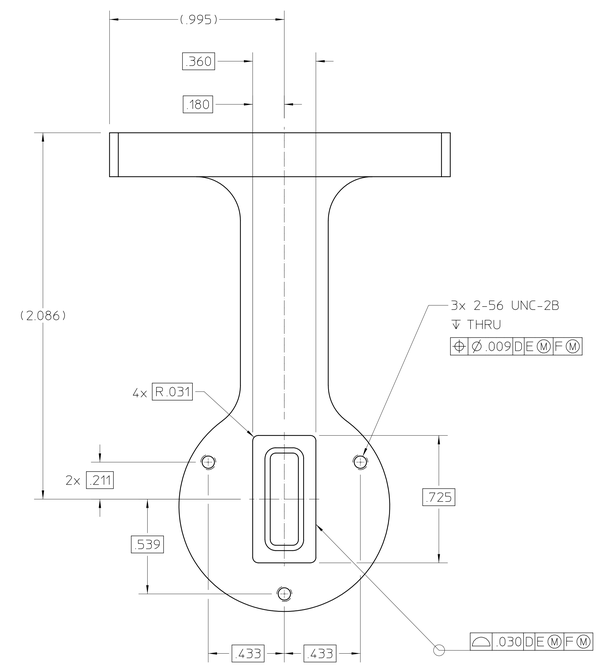

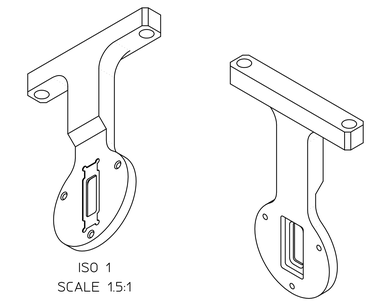

ISO 1
SCALE 1.5:1

ISO 2
SCALE 1.5:1

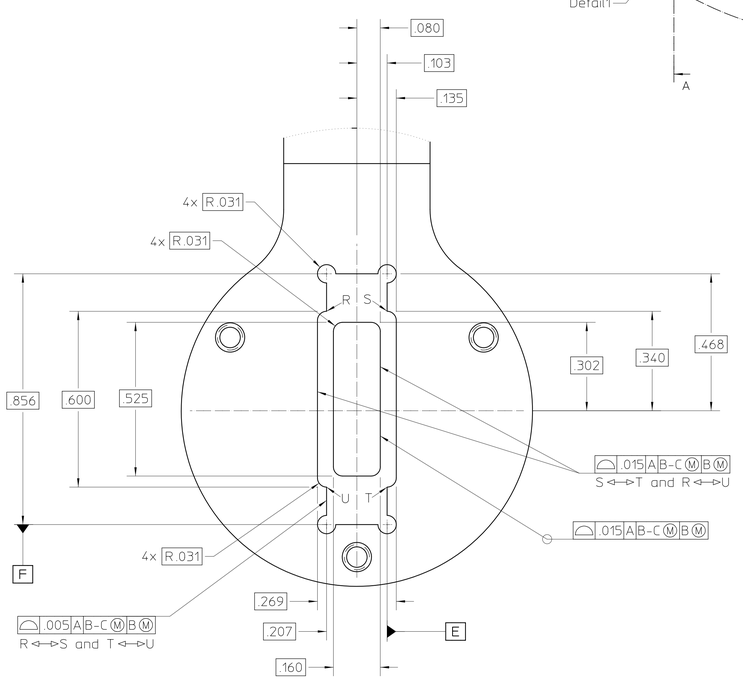

Detail1
SCALE 5:1

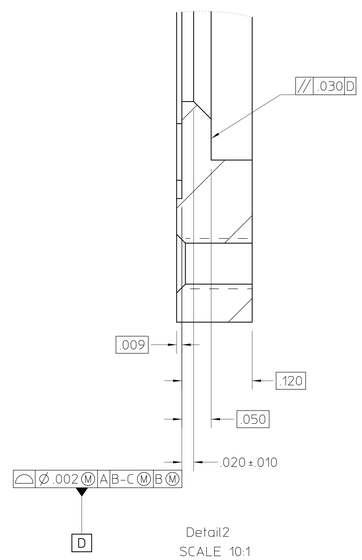

Detail2
SCALE 10:1

NOTES: (UNLESS OTHERWISE SPECIFIED)

1. MATERIAL: ALUMINUM, 6061-T6
2. THIS IS AN ULTRA HIGH VACUUM COMPONENT AND REQUIRES SPECIAL ATTENTION TO AVOID CONTAMINATION, REFER TO LBNL ENGINEERING SPECIFICATION #M20013 FOR CLEANING PROCEDURES.
3. USE OF SULPHUR-BEARING OR SILICONE-BEARING OILS, LUBRICANTS, OR COOLANTS IS PROHIBITED. USE OF POWER DRIVEN, RESIN BONDED, OR RUBBER BONDED ABRASIVES IS PROHIBITED. CERAMIC BONDED ABRASIVES, TUNGSTEN CARBIDE, AND DIAMOND WHEELS ARE ACCEPTABLE.
4. ALL HIDDEN LINES MAY NOT BE SHOWN.
5. ALL DIMENSIONS ARE IN INCHES.
6. TAKE EXTREME CARE NOT TO DING, SCRATCH, DENT OR OTHERWISE MARK ANY MACHINED SURFACE. PROTECT FINISHED PART BY BAGGING OR SIMILAR METHOD TO MAINTAIN CLEANLINESS DURING SHIPMENT AND STORAGE.

REV	AUTHOR	APPROVER	DATE	CHANGE DESCRIPTION
A	ajdemell	ajdemell	2005/08/	INITIAL REVISION

UNLESS OTHERWISE SPECIFIED
TOLERANCES: .X± - .XX± -- .XXX± .005; FRACTIONS: ± -/--; ANGLES: ± -.-°/INCH; MACH. SURFS.: 63 ✓ OR BETTER
REF ASME Y14.5M-1994, THREADS ARE CLASS 2
BREAK EDGES .016 MAX. ON MACHINED WORK
REMOVE BURRS, WELD SPLATTER & LOOSE SCALE

MAT 2: . NOTES:
MAT 1: , ALUMINUM 6061-T6 NOTES:

PROJECT NAME: Advanced Light Source
UNIQUE NUMBER: AL-0020-5065
DO NOT SCALE PRINT
SCALE: 3 : 1
CATEGORY CODE: AL9021
THIRD ANGLE PROJECTION

ERNEST ORLANDO LAWRENCE
BERKELEY NATIONAL LABORATORY
UNIVERSITY OF CALIFORNIA
BERKELEY LAB

ALS - INSTRUMENTATION
PEEM 3 ELECTRON OPTICS
MOTORIZED APERTURE, APERTURE ARM

SHEET 1 OF 1 | SIZE: E | DWG NO: 26C548 | REV A

AUTO GENERATED PDF
Aug 24 2005 09:11:25 PDT