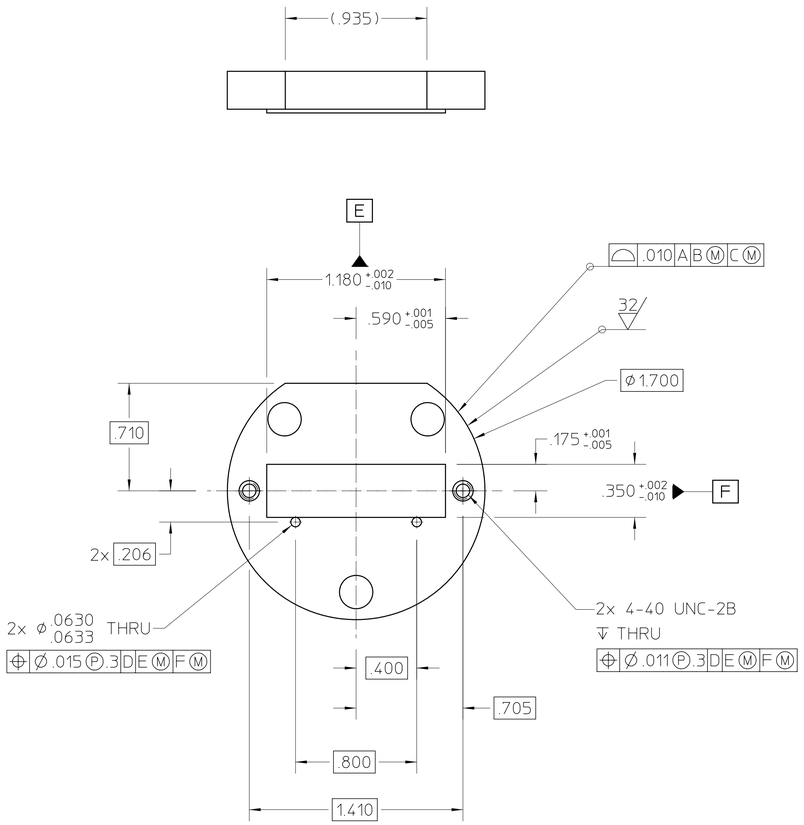

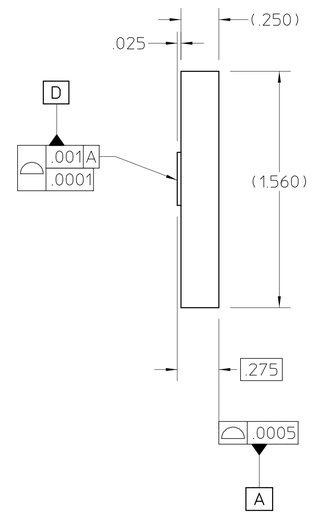

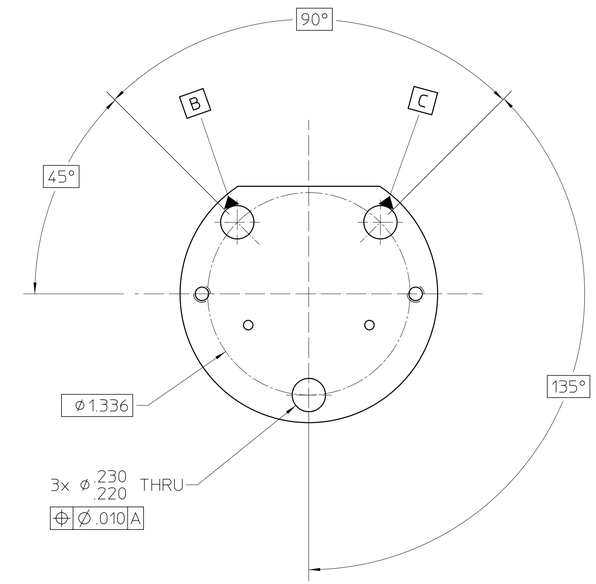

NOTES: (UNLESS OTHERWISE SPECIFIED)

1. MATERIAL: ALUMINUM BRONZE, AMPCO 18

2. THIS IS AN ULTRA HIGH VACUUM COMPONENT AND REQUIRES SPECIAL ATTENTION TO AVOID CONTAMINATION, REFER TO LBNL ENGINEERING SPECIFICATION #M20013 FOR CLEANING PROCEDURES.

3. USE OF SULPHUR-BEARING OR SILICONE-BEARING OILS,LUBRICANTS, OR COOLANTS IS PROHIBITED. USE OF POWER DRIVEN, RESIN BONDED, OR RUBBER BONDED ABRASIVES IS PROHIBITED. CERAMIC BONDED ABRASIVES,TUNGSTEN CARBIDE, AND DIAMOND WHEELS ARE ACCEPTABLE.

4. ALL HIDDEN LINES MAY NOT BE SHOWN.

5. ALL DIMENSIONS ARE IN INCHES.

6. TAKE EXTREME CARE NOT TO DING, SCRATCH, DENT OR OTHERWISE MARK ANY MACHINED SURFACE. PROTECT FINISHED PART BY BAGGING OR SIMILAR METHOD TO MAINTAIN CLEANLINESS DURING SHIPMENT AND STORAGE.

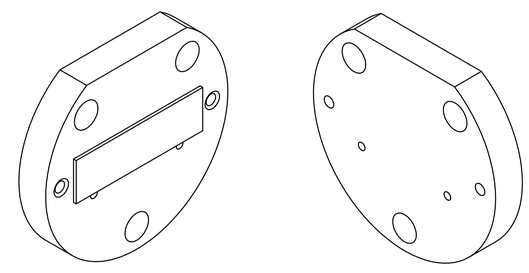

ISO TOP

ISO BOTTOM

REV	AUTHOR	APPROVER	DATE	CHANGE DESCRIPTION
A	ajdemell	ajdemell	06-22-05	INITIAL REVISION

UNLESS OTHERWISE SPECIFIED
TOLERANCES: .X± .- .XX± .-- .XXX± .005; FRACTIONS: ± -/--; ANGLES: ± -.-°/INCH; MACH. SURFS.: 63 ✓ OR BETTER
REF: ASME Y14.5M-1994, THREADS ARE CLASS 2
BREAK EDGES .016 MAX. ON MACHINED WORK
REMOVE BURRS, WELD SPLATTER & LOOSE SCALE

MAT 2: . NOTES:
MAT 1: BAR, ALUMINUM BRONZE, AMPCO 18 NOTES:

PROJECT NAME: Advanced Light Source
UNIQUE NUMBER: AL-0015-9015
DO NOT SCALE PRINT SCALE: 2 : 1 CATEGORY CODE: AL9021
THIRD ANGLE PROJECTION

ERNEST ORLANDO LAWRENCE BERKELEY NATIONAL LABORATORY
UNIVERSITY OF CALIFORNIA
ALS - INSTRUMENTATION
PEEM 3 ELECTRON OPTICS
KINEMATIC ADJUSTMENT ASSEMBLY, Z-AXIS CONTACT PAD

SHEET 1 OF 1 SIZE: D DWG NO: 26C510 REV A

AUTO GENERATED PDF
Jun 22 2005 14:01:28 PDT