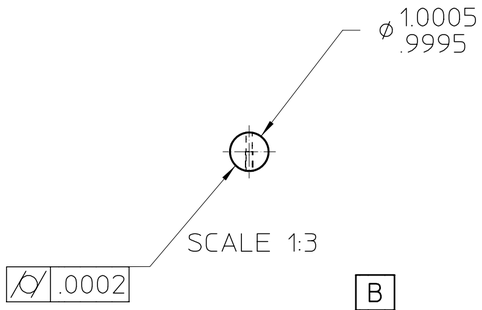

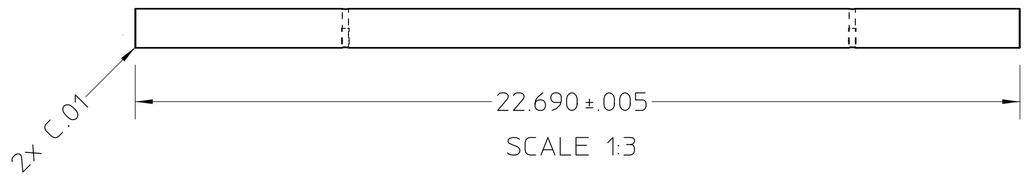

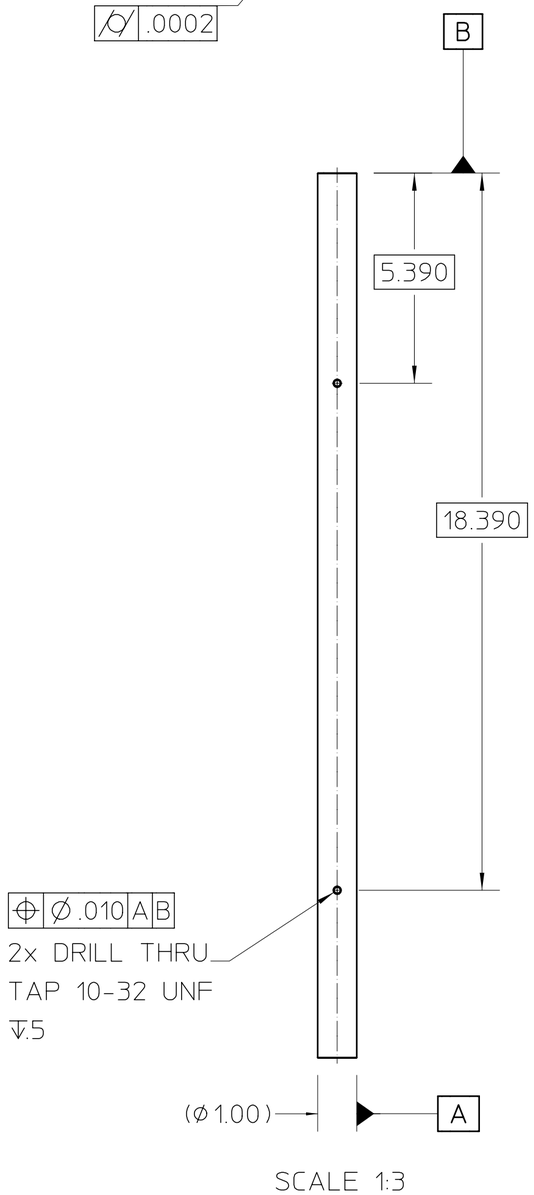

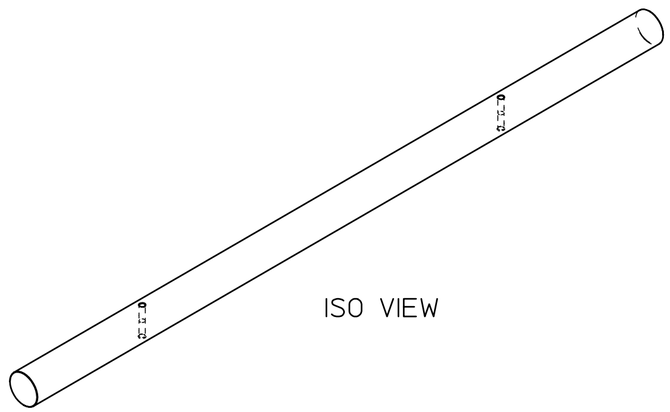

NOTES: (UNLESS OTHERWISE SPECIFIED)

1. MATERIAL: TITANIUM Ti6Al4V (ANNEALED)
2. THIS IS AN ULTRA HIGH VACUUM COMPONENT AND REQUIRES SPECIAL ATTENTION TO AVOID CONTAMINATION, REFER TO LBNL ENGINEERING SPECIFICATION #M20013 FOR CLEANING PROCEDURES.
3. USE OF SULPHUR-BEARING OR SILICONE-BEARING OILS, LUBRICANTS, OR COOLANTS IS PROHIBITED. USE OF POWER DRIVEN, RESIN BONDED, OR RUBBER BONDED ABRASIVES IS PROHIBITED. CERAMIC BONDED ABRASIVES,TUNGSTEN CARBIDE, AND DIAMOND WHEELS ARE ACCEPTABLE.
4. ALL HIDDEN LINES MAY NOT BE SHOWN.
5. ALL DIMENSIONS ARE IN INCHES.
6. PROTECT FINISHED PART FROM DAMAGE BY BAGGING OR SIMILAR METHOD TO PROTECT AND MAINTAIN CLEANLINESS DURING SHIPMENT AND STORAGE. TAKE EXTREME CARE NOT TO DING, SCRATCH, DENT, OR OTHERWISE MARK ANY MACHINED SURFACE.

REV	AUTHOR	APPROVER	DATE	CHANGE DESCRIPTION
A	ajdemell	ajdemell	05-06-05	INITIAL REVISION

UNLESS OTHERWISE SPECIFIED
TOLERANCES: .X± .- .XX± .-- .XXX± .---
FRACTIONS: ± -/--
ANGLES: ± -.-°/INCH
MACH. SURFS.: 125✓ OR BETTER
REF:ASME Y14.5M-1994, THREADS ARE CLASS 2
BREAK EDGES .016 MAX. ON MACHINED WORK
REMOVE BURRS, WELD SPLATTER & LOOSE SCALE

MAT 2: , NOTES:
MAT 1: ROD, NOTES:

PROJECT NAME: Advanced Light Source
UNIQUE NUMBER: AL-0015-0007
DO NOT SCALE PRINT SCALE: 1:3
CATEGORY CODE: AL9021
THIRD ANGLE PROJECTION

ERNEST ORLANDO LAWRENCE BERKELEY NATIONAL LABORATORY
UNIVERSITY OF CALIFORNIA
ALS - INSTRUMENTATION
PEEM 3 ELECTRON OPTICS
RAIL, TRANSFER AND PROJECTOR LENS MOUNT
SHEET 1 OF 1 SIZE: C DWG NO: 26C346 REV A

AUTO GENERATED PDF
May 06 2005 09:21:45 PDT